maintenance & service guide

Presario 1600 Series

Models: 1600T, 1600-XL140, 1600-XL141, 1600-XL142, 1600-XL143, 1600-XL144, 1600-XL145, 1600-XL146, 1600-XL147, and 1600-XL150

Before You Begin	Product Description	Parts Catalog
Specifications	Battery Operations	Pin Assignments
Removal Sequence	Troubleshooting	MSG Index

Notice

Preface

Contact Compaq

Welcome to the *Maintenance & Service Guide* (MSG) for the Compaq Presario 1800 Series Portable Computers. This online guide is designed to serve the needs of those who repair Compaq products. The Notice contains the copyright and trademark information. The Preface shows symbol conventions, Technician Notes and Serial Number locations on the unit.

This MSG will be periodically maintained and updated online as needed.

For content comments or questions, contact Tech Support..

To report a technical problem, contact your Regional Support Center or IM Help Center.

maintenance & service guide

Presario 1600 Series

Models: 1600T, 1600-XL140, 1600-XL141, 1600-XL142, 1600-XL143, 1600-XL144, 1600-XL145, 1600-XL146, 1600-XL147, and 1600-XL150

Before You Begin	Product Description	Parts Catalog
Specifications	Battery Operations	Pin Assignments
Removal Sequence	Troubleshooting	MSG Index

Notice
Preface
Contact Compaq

Before You Begin

Notice

The information in this guide is subject to change without notice.

COMPAQ COMPUTER CORPORATION SHALL NOT BE LIABLE FOR TECHNICAL OR EDITORIAL ERRORS OR OMISSIONS CONTAINED HEREIN, NOR FOR INCIDENTAL OR CONSEQUENTIAL DAMAGES RESULTING FROM THE FURNISHING, PERFORMANCE, OR USE OF THIS MATERIAL.

This guide contains information protected by copyright. No part of this guide may be photocopied or reproduced in any form without prior written consent from Compaq Computer Corporation.

© 2000 Compaq Computer Corporation.
All rights reserved. Printed in the U.S.A.

Compaq, Presario 1600 Series Registered U. S. Patent and Trademark Office.

Microsoft, MS-DOS, and Windows are registered trademarks of Microsoft Corporation.
Windows 98 and Windows 2000 are trademarks of Microsoft Corporation.

The software described in this guide is furnished under a license agreement or nondisclosure agreement. The software may be used or copied only in accordance with the terms of the agreement.

Product names mentioned herein may be trademarks and/or registered trademarks of their respective companies.

Maintenance and Service Guide

Compaq Presario 1600 Series Portable Computer

First Edition (January 2000)
Compaq Computer Corporation

Top of Page

Before You Begin

Preface

This *Maintenance and Service Guide* is a troubleshooting guide that can be used for reference when servicing the Compaq Presario 1800 Series Portable Computers.

Compaq Computer Corporation reserves the right to make changes to the Compaq Presario 1800 Series Portable Computers without notice.

Symbols

The following words and symbols mark special messages throughout this guide.

WARNING: Text set off in this manner indicates that failure to follow directions in the warning could result in bodily harm or loss of life.

CAUTION: Text set off in this manner indicates that failure to follow directions could result in damage to equipment or loss of data.

IMPORTANT: Text set off in this manner presents clarifying information or specific instructions.

NOTE: Text set off in this manner presents commentary, sidelights, or interesting points of information.

Technician Notes

WARNING: Only authorized technicians trained by Compaq should repair this equipment. All troubleshooting and repair procedures are detailed to allow only subassembly/module level repair. Because of the complexity of the individual boards and subassemblies, the user should not attempt to make repairs at the component level or to make modifications to any printed circuit board. Improper repairs can create a safety hazard. Any indications of component replacement or printed circuit board modifications may void any warranty.

Serial Number

When requesting information or ordering spare parts, you should provide the computer serial number to Compaq. The serial number is located on the bottom of the computer.

Locating Additional Information

The following documentation is available to support this product:

- Compaq Presario 1800 Series Portable Computer documentation set
- *Introducing Windows 98 Guide*
- *Introducing Windows 2000 Guide*
- Service Training Guides
- Compaq Service Advisories and Bulletins
- *Compaq QuickFind*
- *Compaq Service Quick Reference Guide*

Top of Page

Products Description

Models and Features

Compaq Presario 1600 Series Portable Computer Models		
	Model XL140	**Model XL141**
Display	12.1 inch TFT	12.1 inch TFT
Processor	Celeron 466 MHz w/128 Cache	Celeron 466 MHz w/128 Cache
Hard Drive	6.0 GB	6.0 GB
CD or DVD Drive	24X CD Drive	6X DVD Drive
Diskette Drive	3.5 inch Floppy Drive	3.5 inch Floppy Drive
Modem	56.0 Kbps Data/Fax with PCI	56.0 Kbps Data/Fax with PCI
Networking	Not Supported	Not Supported
Battery	3.2 Li-ION	3.2 Li-ION
System Memory	64 MB PC100	64 MB PC100
Misc 1	TV-Out	TV-Out
	Model XL142	**Model XL143**
Display	12.1 inch TFT	14.1 inch TFT
Processor	Celeron 500 MHz w/128 Cache	Celeron 500 MHz w/128 Cache
Hard Drive	6.0 GB	12.0 GB
CD or DVD Drive	6X DVD Drive	6X DVD Drive
Diskette Drive	3.5 inch Floppy Drive	3.5 inch Floppy Drive
Modem	56.0 Kbps Data/Fax with PCI	56.0 Kbps Data/Fax with PCI
Networking	Not Supported	Not Supported
Battery	3.2 Li-ION	3.2 Li-ION
System Memory	64 MB PC100	64 MB PC100
Misc 1	TV-Out	TV-Out
	Model XL144	**Model XL145**
Display	14.1 inch TFT	14.1 inch TFT
Processor	Celeron 466 MHz w/128 Cache	Pentium III 500 MHz w/256 Cache
Hard Drive	6.0 GB	6.0 GB
CD or DVD Drive	6X DVD Drive	6X DVD Drive
Diskette Drive	3.5 inch Floppy Drive	3.5 inch Floppy Drive
Modem	56.0 Kbps Data/Fax International with PCI	56.0 Kbps Data/Fax International with PCI
Networking	Not Supported	Not Supported
Battery	3.2 Li-ION	3.2 Li-ION
System Memory	64 MB PC100	64 MB PC100
Misc. 1	TV Out	TV Out
	Model XL146	**Model XL147**
Display	12.1 inch TFT or 14.1 inch TFT	14.1 inch TFT
Processor	Pentium III/500 MHz w/256 Cache or Celeron 500 MHz w/128 Cache	Pentium III/500 MHz w/256 Cache
Hard Drive	6.0 GB or 12.0 GB	12.0 GB
CD or DVD Drive	6X DVD Drive	6X DVD Drive
Diskette Drive	3.5 inch Floppy Drive	3.5 inch Floppy Drive
Modem	56.0 Kbps Data/Fax with PCI	56.0 Kbps Data/Fax-I with PCI
Networking	Not Supported	Not Supported
Battery	3.2 Li-ION	3.2 Li-ION
System Memory	64 MB PC100	64 MB PC100
Misc 1	TV-Out	TV-Out
	Model XL150	
Display	14.1 inch TFT	
Processor	Celeron 533 MHz w/128 Cache	
Hard Drive	6.0 GB	
CD or DVD Drive	6X DVD Drive	
Diskette Drive	3.5 inch Floppy Drive	
Modem	56.0 Kbps Data/Fax with PCI	
Networking	Not Supported	
Battery	3.2 Li-ION	
System Memory	64 MB PC100	
Misc 1	TV-Out	

Configure To Order Parts

maintenance & service guide

Presario 1600 Series

Models: 1600T, 1600-XL140, 1600-XL141, 1600-XL142, 1600-XL143, 1600-XL144, 1600-XL145, 1600-XL146, 1600-XL147, and 1600-XL150

- System Unit
- Boards
- Display Assembly
- Mass Storage Devices
- Miscellaneous Cable Kit
- Miscellaneous Hardware Kit
- Miscellaneous Plastics Kit
- Miscellaneous Parts
- CTO Parts
- Documentation and Software

Parts Catalog

This section provides a breakdown of spare parts and identifies the spare part ordering number associated with each item for Compaq Presario 1600 Series Portable Computers.

Physical and Environmental
System Interrupts
System DMA
System I/O Addresses
System Memory Catalog
Display
Memory Expansion
Diskette Drive
Hard Drive
CD or DVD Drive
Battery Pack

Specifications

This section covers the following specifications of Compaq Presario 1600 Series Portable Computers.

Physical and Environmental

Computer Specifications		
	U.S.	**Metric**
Dimensions Height Depth Width	 1.63 in 10.38 in 12.20 in	 4.14 cm 26.36 cm 31.00 cm
Weight with 14.1" TFT Display	7.15 lbs	3.25 kg
Stand-Alone (Battery Pack) **Power Requirements** Nominal Operating Maximum Average Peak Operating	Li-ion 3.2 AHr W @ 14.8 V W @ 14.8 V W @ 14.8 V	
AC Power Requirements Operating Voltage Operating Current Operating Frequency Maximum Transient	 100-240 V 0.8/0.4 A RMS 47-63 Hz Meets IEC801-4 & IEC801-5 1kV for 50 ns	
Temperature Operating Non Operating	50° to 95 °F -4° to 140 °F	10° to 35 °C -20° to 60 °C
Relative Humidity (non-condensing) Operating Non Operating (tw = 38.7°C max)	 10% to 90% 5% to 95%	
Altitude Operating Non Operating	 0 to 10,000 ft 0 to 30,000 ft	 0 to 3.05 km 0 to 9.14 km

Shock Operating Non operating	 10 G, 11 ms, half sine 240 G, 2 ms, half sine
Vibration Operating Non Operating	 0.5 G 1.5 G
NOTE:	Applicable product safety standards specify thermal limits for plastic surfaces. Compaq Explorer Series Portable Computers operate well within this range of temperatures.

Top of Page

System Interrupts

System Interrupts			
Hardware IRQ	**System Function**	**Hardware IRQ**	**System Function**
IRQ0	System Timer	IRQ10	SCI IRQ used by ACPI Bus
IRQ1	Standard 101/102-key or Microsoft Natural Keyboard	IRQ11	ACPI IRQ Holder for PCI IRQ Steering
IRQ2	Programmable Interrupt Controller	IRQ11	VIA Tech 3038 PCI to USB Universal Host Controller
IRQ4	Communications Port (COM1)	IRQ11	ACPI IRQ Holder for PCI IRQ Steering
IRQ6	Standard Floppy Disk Controller	IRQ11	Compaq PCI Modem Enumerator
IRQ7	Printer Port (LPT1)	IRQ12	Synaptics PS/2 TouchPad
IRQ8	System CMOS/Real Time Clock	IRQ13	Numeric Data Processor
IRQ9	VIA PCI Audio Controller	IRQ14	VIA Bus Master PCI IDE Controller
IRQ9	Texas Instruments PCI-1211 CardBus Controller	IRQ14	Primary IDE Controller (Dual FIFO)

IRQ9	Trident CyberBlade i1 AGP (51)	IRQ15	VIA Bus Master PCI IDE Controller
		IRQ15	Secondary IDE Controller (Dual FIFO)

Top of Page

System DMA

System DMA	
Hardware DMA	**System Function**
DMA 2	Standard Floppy Disk Controller
DMA 4	Direct memory access controller

Top of Page

System I/O Addresses

System I/O Addresses	
I/O Address (Hex)	**System Function (Shipping Configuration)**
0000h-000Fh	Direct Memory Access Controller
0020h-0021h	Programmable Interrupt Controller
0040h-0043h	System Timer
0060h-0060h	Standard 101/102-Key or Microsoft Natural Keyboard

0061h-0061h	System speaker
0062h-0062h	ACPI Embedded Controller
0064h-0064h	Standard 101/102-Key or Microsoft Natural Keyboard
0066h-0066h	ACPI Embedded Controller
0070h-0075h	System CMOS/Real Time Clock
0081h-008Fh	Direct Memory Access Controller
00A0h-00A1h	Programmable Interrupt Controller
00C0h-00DFh	Direct Memory Access Controller
00F0h-00FFh	Numeric Data Processor
0170h-0177h	VIA Bus Master PCI IDE Controller
0170h-0177h	Secondary IDE controller (dual fifo)
01F0h-01F7h	VIA Bus Master PCI IDE controller
01F0h-01F7h	Primary IDE controller (dual fifo)
0200h-0207h	Gameport Joystick
02F8h-02FFh	Compaq 56K V.90 HSF Mini PCI Modem
0376h-0376h	Secondary IDE Controller (Dual FIFO)
0376h-0376h	VIA Bus Master PCI IDE Controller
0378h-037Fh	Printer Port (LPT1)
03B0h-03BBh	Trident CyberBlade i1 AGP (51)
03C0h-03DFh	Trident CyberBlade i1 AGP (51)
03E8h-03EFh	Symphony Port (COM3)
03F0h-03F5h	Standard Floppy Disk Controller

03F6h-03F6h	VIA Bus Master PCI IDE Controller
03F6h-03F6h	Primary IDE Controller (Dual FIFO)
03F7h-03F7h	Standard Floppy Disk Controller
03F8h-03FFh	Communications Port (COM1)
0CF8h-0CFFh	PCI Bus
1000h-10FFh	VIA PCI Audio Controller (WDM)
1400h-141Fh	VIA Tech 3038 PCI to USB Universal Host Controller
1420h-1427h	Primary IDE Controller (DUAL FIFO)
1420h-142Fh	VIA Bus Master PCI IDE Controller
1428h-142Fh	Secondary IDE Controller (DUAL FIFO)
1430h-1433h	VIA PCI Audio Controller (WDM)
1434h-1437h	VIA PCI Audio Controller (WDM)
1438h-143Fh	Compaq PCI Modem Enumerator

Top of Page

System Memory Catalog

System Memory Catalog	
Memory Address	**System Function**
00000000h-0009FFFFh	System Board Extension for ACPI BIOS
000A0000h-000AFFFFh	Trident CyberBlade i1 AGP (51)
000B0000h-000BFFFFh	Trident CyberBlade i1 AGP (51)
000C0000h-000CBFFFh	Trident CyberBlade i1 AGP (51)
000DC000h-000DFFFFh	System Board Extension for ACPI BIOS

000E0000h-000FFFFFh	System Board Extension for ACPI BIOS
03800000h-03800FFFh	Texas Instruments PCI-1211 CardBus Controller
F4000000h-F400FFFFh	Compaq PCI Modem Enumerator
F4100000h-F411FFFFh	Trident CyberBlade i1 AGP (51)
F4100000h-F57FFFFFh	PCI Standard PCI-to-PCI Bridge
F4120000h-F412FFFFh	Trident CyberBlade i1 AGP (51)
F4800000h-F4FFFFFFh	Trident CyberBlade i1 AGP (51)
F5000000h-F57FFFFFh	Trident CyberBlade i1 AGP (51)
F8000000h-FBFFFFFFh	PCI Standard Host CPU Bridge
FFFE0000h-FFFFFFFFh	System Board Extension for ACPI BIOS

Display

Top of Page

12.1 inch Diagonal TFT Display with LVDS		
	U.S.	**Metric**
Dimensions **Height** **Width** **Depth**	 10.83 in 7.83 in 0.22 in	 27.5 cm 19.9 cm 0.57 cm
Display Dimensions Height Width	 9.69 in 7.26 in	 24.6 cm 18.45 cm
Weight	15.53 oz	440 g
Contrast Ratio	150:1 typ	
Brightness	105 cd/mm^2 (110nits - MRD1.1)	
Total Power Consumption	1.2 to 1.5W typ (Assuming backlight current of 5.0 mA, or 100 nits luminance)	

Response Time	30 ms typ (Trise) 20 ms typ (Tfall) 50 ms (Total)
Refresh Rate	60 Hz

Top of Page

14.1 inch (Diagonal) TFT Display with LVDS		
	U.S.	**Metric**
Dimensions **Height** **Width** **Depth**	 11.76 in 8.92 in 0.22 in	 29.85 cm 22.65 cm 0.57 cm
Display Dimensions Height Width	 11.26 in 8.44 in	 28.57 cm 21.43 cm
Weight	19.94 oz	565 gm
Contrast Ratio	150:1 mini	
Brightness	120 cd/mm^2 (125nits - MRD1.1)	
Total Power Consumption	1.2 to 1.5W typ (Assuming backlight current of 5.0 mA, or 100 nits luminance)	
Response Time	50 ms	
Refresh Rate	60 Hz	

Top of Page

Memory Expansion

Memory Expansion		
System Memory	**Expansion Board Memory**	**Total Memory**
64-MB	none	64-MB
64-MB	32-MB	96-MB
64-MB	64-MB	128-MB
64-MB	128-MB	192-MB
64-MB	256-MB	320-MB

Top of Page

Diskette Drive

Diskette Drive	
Capacity per Diskette (High/Low)	1.44 MB/720KB
Diskette Size	3.5"
Number of LED Indicators (Read/Write)	0
Number of Drives Supported	1
Drive Rotation (rpm)	300
Transfer Rate (Kbps)	500
Bytes per Sector	512
Sectors per Track (High/Low)	18/9
Tracks per Side (High/Low)	80
Access Times Track-to-Track (ms) Average (ms) Setting Time (ms) Latency Average (ms)	 3 94 15 100
Cylinders (High/Low)	80
Number of Read/Write Heads	2

Top of Page

Hard Drive

Hard Drive			
Drive Type	**6.0-GB**	**12.0-GB**	**18.0-GB**
Capacity Per Drive	6.0-GB	12.0-GB	18.0-GB
Logical Configuration Cylinders Heads Sectors per track Bytes per sector	 8647 4 190/330 512	 11968 6 190/330 512	 11968 6 190/330 512

Seek Times (Typical, Including settling in ms) Single track Average Full stroke	 4 14 24	 4 14 24	 4 14 24
Transfer Rate At Interface	33.3 MB/s	33.3 MB/s	33.3 MB/s

Top of Page

CD/DVD Drive

CD/DVD Drive			
	6x DVD	**CD-RW**	**24x CD-ROM**
Dimensions	128 x 129 x 12.7mm	128 x 129 x 12.7 mm	128 x 129 x 12.7 mm
Weight	0.28 kg	300 g	0.175 kg
Rotational Speed	3450 rpm	Not Available	4225 rpm
Typical Transfer Rate Sustained Data Transfer Rate	8100 KB/s	2100 KB/s	3600 KB/s
Access Time Average Random Access Time	140 ms	150 ms	120 ms
Spin Up time	<15 s	<10.0 s	2.7 s
Data Buffer Capacity	512 KB	Not Available	128 KB

Top of Page

Battery Pack

Battery Pack	
Type	Lithium Ion (Li ion)
Dimensions Height Length Width	 0.8 in (20.3 mm) 5.7 in (145 mm) 3.1 in (78.7 mm)
Weight	0.90 lb (408.2 g)
Operating Lifetime	2 hr 30 min*
Energy Nominal Open Circuit Voltage Capacity Power	 14.4 V 3000 mAH 43.2 WH
Temperature Requirements Operating Non-operating Charging	 32° F (0-50° C) -20° C -60° C 5° C-45° C
*The battery operating lifetime changes depending on your power management settings, system components, options, and applications you use.	

Top of Page

Battery Pack Operations

Increasing Battery Pack Operating Time

Battery pack operating time differs depending on several variables. To avoid unnecessary replacement, consider the following variables when determining how long a charged battery pack should last:

- Power Management Settings
- Hardware Configuration
- Software Applications
- Installed Options
- Display Brightness
- Hard Drive Usage
- Changes in Operating Temperatures
- Type and Number of Installed PC Cards

NOTE:	The power consumption requirements for PC Cards vary widely. Some cards drain the battery pack very rapidly.

Battery pack operating time can be increased by as much as 50 percent by controlling the energy required by the computer and the energy stored in the battery pack.

Minimizing the Energy Required

To minimize the energy required by the computer, follow these guidelines:

- Set the power conservation levels in the Power Management utility to Maximum.
- Customize the timeout value to work more efficiently with the applications. The length of battery life depends on the values selected.

Maximizing the Energy Stored

To maximize the energy stored in the battery pack, follow these guidelines:

- Condition the battery pack at least every 30 days to improve overall battery performance.
- Keep a battery pack in the computer when using it with AC power to supply the battery pack with a constant trickle charge.
- Store the battery pack in a cool, dry place when not in use.

Top of Page

Conditioning a Battery Pack

⚠	**CAUTION:** To avoid a loss of data, ensure that all data is saved before discharging a battery pack.

To condition a battery pack, complete the following steps:

1. Plug in the AC adapter and allow the battery to charge until the battery charging status icon turns off. Your battery gauge may show four bars (and Windows may report 100%) before the battery charging status icon turns off. Do not unplug the AC adapter until the battery charging status icon disappears.
2. Unplug the AC adapter and allow the battery to drain until the computer reaches hibernation and turns itself off. **Do not plug in the AC adapter during this process or you will need to restart with Step No. 1.** You may use the computer while the battery is draining.
3. Plug in the AC adapter and begin using the computer.

The table below shows the approximate battery pack charge times.

Battery Charge Time	
Li-ion Battery Pack	**Charge Time**
Computer On Line Computer Off Line	4.5 hours 2:50 hrs

Top of Page

Disposing of a Used Battery Pack

In the interest of safeguarding our environment. Compaq Computer Corporation recommends that nickel metal hydride (NiMH) and lithium ion (Li-ion) battery packs be recycled. Battery packs should be handled in accordance with country, state, province, or local regulations.

⚠	**CAUTION:** Never attempt to open or service a battery pack. Opening a battery pack not only damages the pack and makes it unusable, but also exposes potentially harmful battery components.

Top of Page

Connector Pin Assignments

This section provides connector pin assignment tables for Compaq Presario 1600 Series Portable Computers. For additional information on connectors, refer to the sections on Rear Connectors and QuikDock Connectors.

NOTE:	The signals in all tables of this appendix are considered active high unless otherwise indicated by an asterisk (*).

Parallel Connector

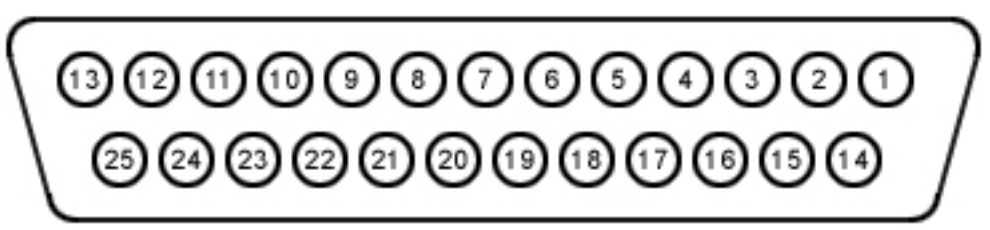

Pin	Signal	Pin	Signal
1	Strobe*	10	Acknowledge*
2	Data Bit 0	11	Busy
3	Data Bit 1	12	Paper Out
4	Data Bit 2	13	Select
5	Data Bit 3	14	Auto Linefeed*
6	Data Bit 4	15	Error*
7	Data Bit 5	16	Initialize Printer*
8	Data Bit 6	17	Select In*
9	Data Bit 7	18-25	Signal Ground

* = Active low

Serial Connector

Connector	Pin	Signal
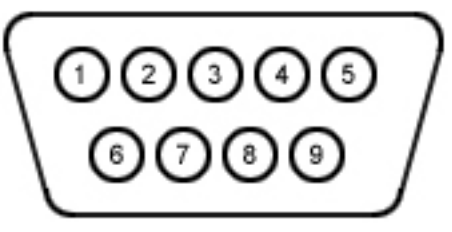	1	Carrier Detect
	2	Receive Data
	3	Transmit Data
	4	Data Terminal
	5	Ready
	6	Signal Ground
	7	Data Set Ready
	8	Ready to Send
	9	Clear to Send
		Ring Indicator

Top of Page

- Removal Sequence
- Electrostatic Discharge
- Service Considerations
- Cables and Connectors
- Preparing the Computer for Disassembly
- QuikDock
- Battery Pack
- Palmrest Cover with TouchPad
- Keyboard
- Status/Internet Zone Cover
- Internet Button Board
- Heatspreader
- Modem
- Hard Drive
- DisqPlay Module
- Processor
- CD or DVD Drive
- Display Panel Assembly
- Upper CPU Cover
- Fan Assembly
- RTC Battery
- Diskette Drive
- Battery Charger Board
- Speaker Assembly
- System Board
- Memory Module

Removal Sequence

This section explains the removal and replacement procedures for the computer.

Serial Number Location

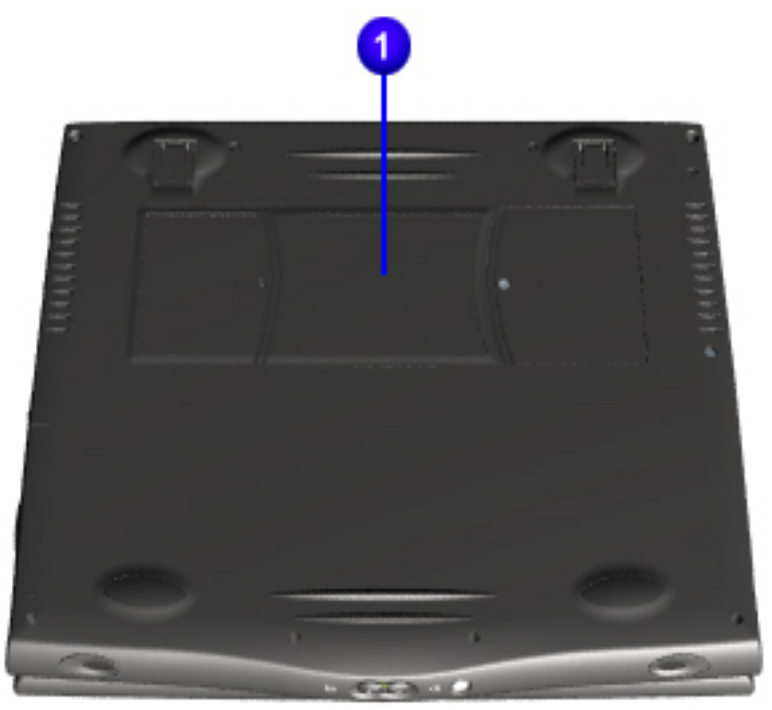

Report the computer serial number 1 to Compaq when requesting information or ordering spare parts. The serial number is located on the underside of the computer.

- Preliminary Steps
- Clearing the Power-On Password
- Power-On Self Test (POST)
- Compaq Diagnostics
- Diagnostic Error Codes
- Troubleshooting Without Diagnostics
- Solving Minor Problems
- Contacting Compaq Support

Troubleshooting

This section covers troubleshooting information for the Compaq Presario 1800 Series Portable Computers. The basic steps in troubleshooting include:

1. Preliminary Steps
2. The Power-On Self-Test (POST)
3. The recommended actions described in the diagnostic tables if you are unable to run POST or if POST displays an error message.

When following the recommended actions in the Sections on POST and Diagnostic Error Codes perform them in the order listed. Rerun POST after each recommended action until the problem is solved and no error message occurs. Once the problem is solved, do not complete the remaining recommended actions.

NOTE:	If the problem is intermittent, check the computer several times to verify that the problem is solved.

- Models and Features
- Controls and Lights
- Internet Zone Buttons and Lights
- Front Bezel Components
- Left-Side Components
- Right-Side Components
- Underneath the Unit
- Rear Connectors
- QuikDock Components
- QuikDock Connectors
- Power Management for Windows 98

Products Description

Controls and Lights

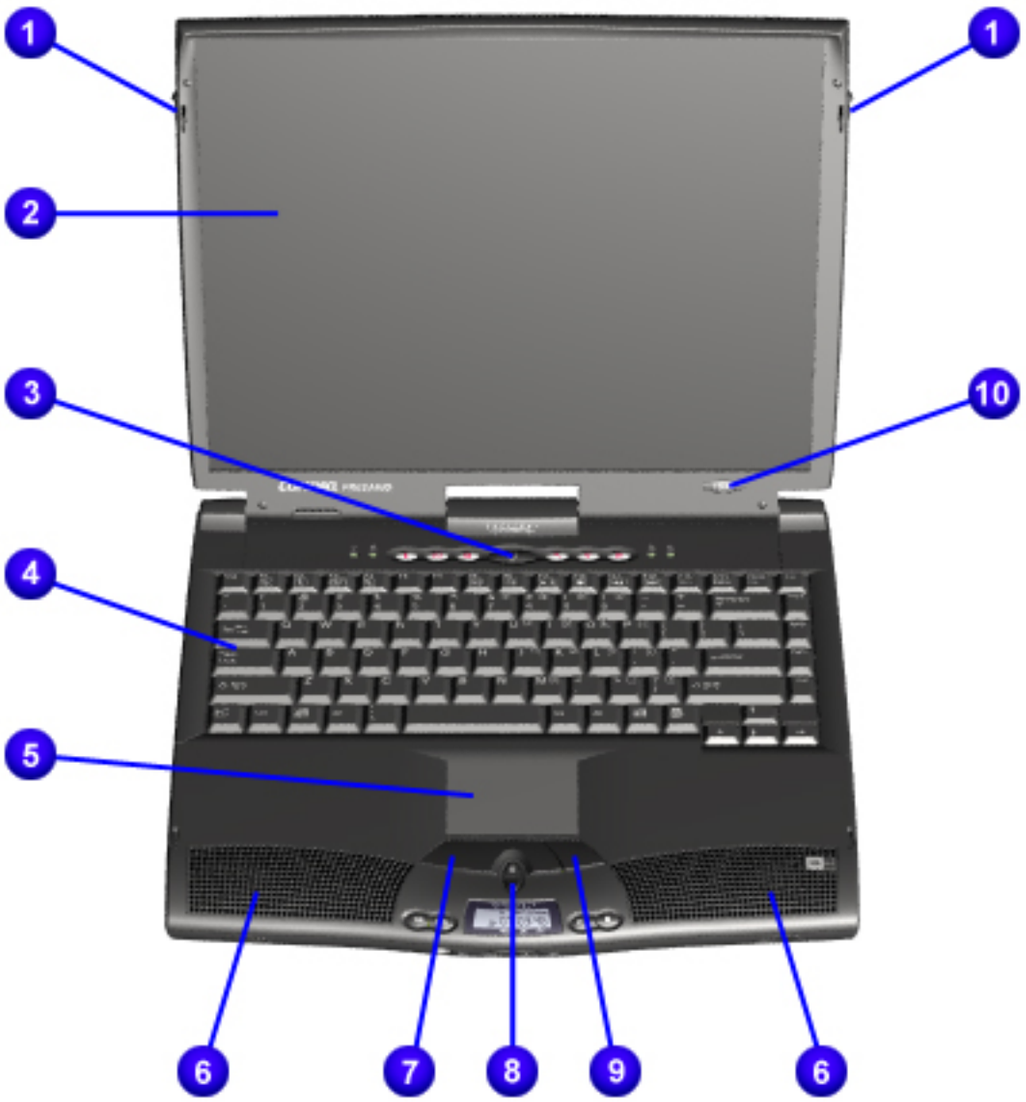

1. Display Release Latch

2. Display

3. Power (On/Off) Button

4. Keyboard

5. TouchPad

6. Integrated Speakers

7. TouchPad Button (Left)

8. Scroll Up/Down Button

9. TouchPad Button (Right)

10. Model Number

Models and Features
Controls and Lights
Internet Zone Buttons and Lights
Front Bezel Components
Left-Side Components
Right-Side Components
Underneath the Unit
Rear Connectors
QuikDock Components
QuikDock Connectors
Power Management for Windows 98

Products Description

Configure To Order Features

Compaq Presario 1600 Series Portable Computer Configure To Order Features	
Display	12.1" TFT (PN: 165532-002) 14.1" TFT (PN: 165532-005)
Processors	Celeron 466 FCPGA (PN: 165875-007) Celeron 500 FCPGA (PN: 165875-004) Pentium III 500 FCPGA (PN: 165874-001) Pentium III 600 FCPGA (PN: 165874-007)
System Memory	100MHz 128SD (64 Down +64 Down) (PN: 165528-003) 100MHz 192SD (64 Down + 128 Up) (PN: 165528-004) 100MHz 64SD (Down) (PN: 165528-001) 100MHz 96SD (64 Down + 32 Up) (PN: 165528-002)
Diskette Drive	Standard 3.5" Floppy (PN: 165531-001)
CD-ROM/DVD Drive	24X CD-ROM Drive (PN: 165529-001) 6X DVD Drive (PN: 165529-003) CD-RW Drive (PN: 165529-004)
Hard Drive	6.0-GB (PN: 165530-004) 12.0-GB (PN: 165530-002) 18.0-GB (PN: 165530-005)
Software	Feature Home Collection (Microsoft) Bundled CD (PN: 171952-001) Microsoft Office 2000Profes Bundled CD (PN: 171952-003) Microsoft Office 2000SBE Bundled CD (PN: 171952-002)

Return to Models and Features

- Models and Features
- Controls and Lights
- Internet Zone Buttons and Lights
- Front Bezel Components
- Left-Side Components
- Right-Side Components
- Underneath the Unit
- Rear Connectors
- QuikDock Components
- QuikDock Connectors
- Power Management for Windows 98

Products Description

Internet Zone Buttons and Lights

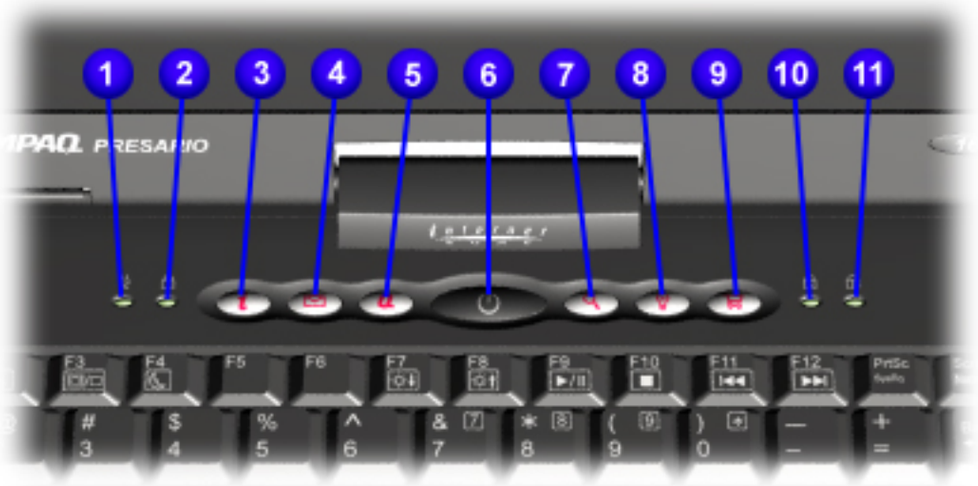

1. AC Adapter Light

2. Cap Lock Light

3. Instant Internet Access Button

4. Instant E-Mail Button

5. My Presario Instant Access Button

6. Power Button

7. Instant Search Button

8. Online Marketplace Button (US/Puerto Rico), Instant Answer Button (countries outside the US)

9. Retail Central Button (US/Puerto Rico), Instant E-Commerce Button (countries outside the US)

10. Num Lock Light

11. Scroll Lock Light

- Models and Features
- Controls and Lights
- Internet Zone Buttons and Lights
- Front Bezel Components
- Left-Side Components
- Right-Side Components
- Underneath the Unit
- Rear Connectors
- QuikDock Components
- QuikDock Connectors
- Power Management for Windows 98

Products Description

Front Bezel Components

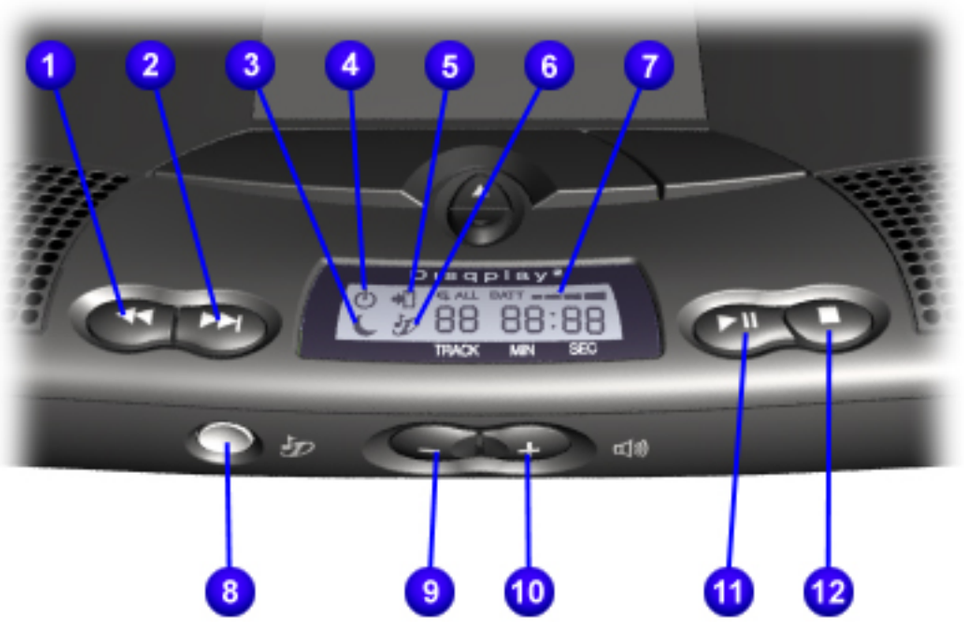

1. Previous Track Button

2. Next Track Button

3. Sleep Status Icon

4. Power Status Icon

5. Battery Charging Status Icon

6. DisqPlay Status Icon

7. Battery Gauge

8. DisqPlay On/Off Button

9. Volume Down Button

10. Volume Up Button

11. Play/Pause Button

12. Stop Button

- Models and Features
- Controls and Lights
- Internet Zone Buttons and Lights
- Front Bezel Components
- Left-Side Components
- Right-Side Components
- Underneath the Unit
- Rear Connectors
- QuikDock Components
- QuikDock Connectors
- Power Management for Windows 98

Products Description

Left Side Components with Diskette Drive

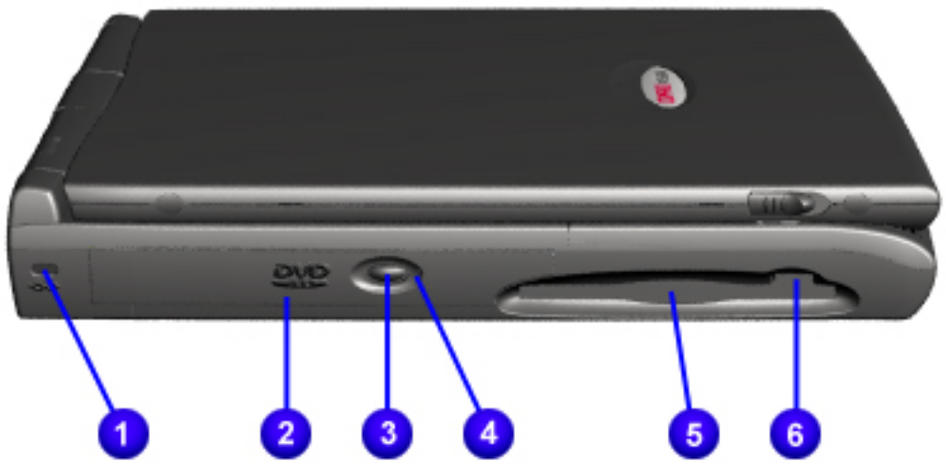

1. Security Slot
2. CD or DVD Drive
3. CD or DVD Drive Eject Button
4. CD or DVD Drive Manual Eject Hole
5. Diskette Drive
6. Diskette Drive Eject Button

- Models and Features
- Controls and Lights
- Internet Zone Buttons and Lights
- Front Bezel Components
- Left-Side Components
- Right-Side Components
- Underneath the Unit
- Rear Connectors
- QuikDock Components
- QuikDock Connectors
- Power Management for Windows 98

Products Description

Right Side Components

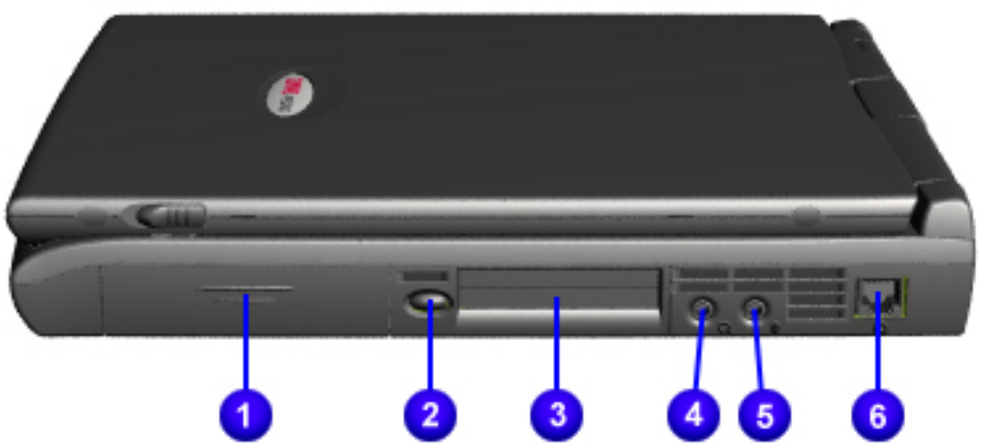

1. Battery Compartment
2. PC Card Eject Button
3. PC Card Slot
4. Headphone Jack
5. Microphone Jack
6. Modem Port

- Models and Features
- Controls and Lights
- Internet Zone Buttons and Lights
- Front Bezel Components
- Left-Side Components
- Right-Side Components
- Bottom of Unit
- Rear Connectors
- QuikDock Components
- QuikDock Connectors
- Power Management for Windows 98

Products Description

Bottom of Unit

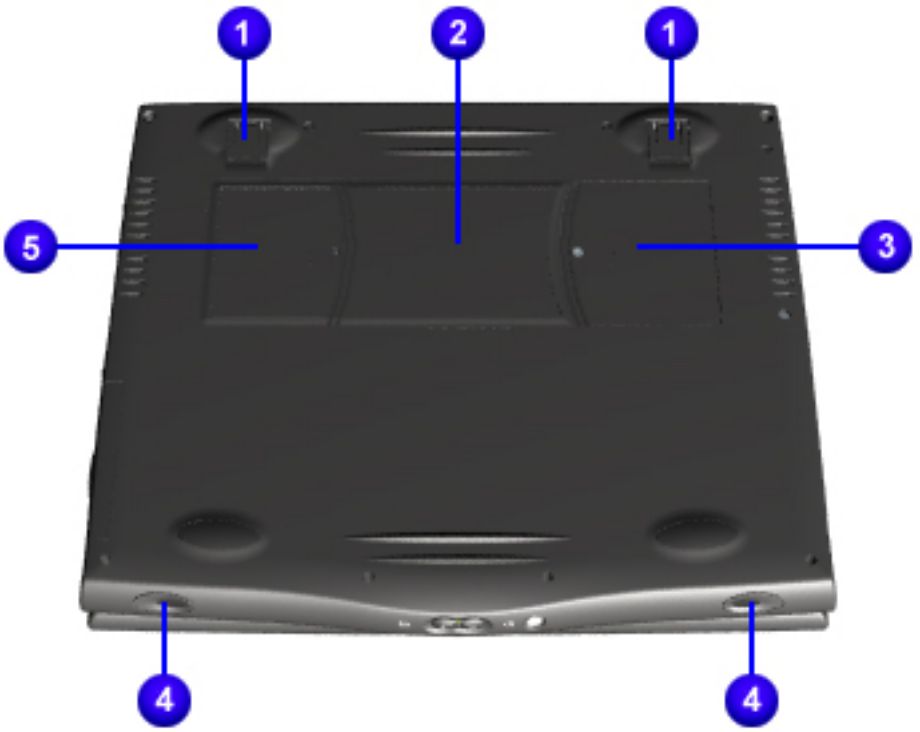

1. Pop-up Feet
2. Serial Number
3. Memory Compartment Door
4. Speaker Ports
5. Modem Door

- Models and Features
- Controls and Lights
- Internet Zone Buttons and Lights
- Front Bezel Components
- Left Side Components
- Right Side Components
- Bottom of Unit
- Rear Connectors
- QuikDock Components
- QuikDock Connectors
- Power Management for Windows 98

Products Description

Rear Connectors

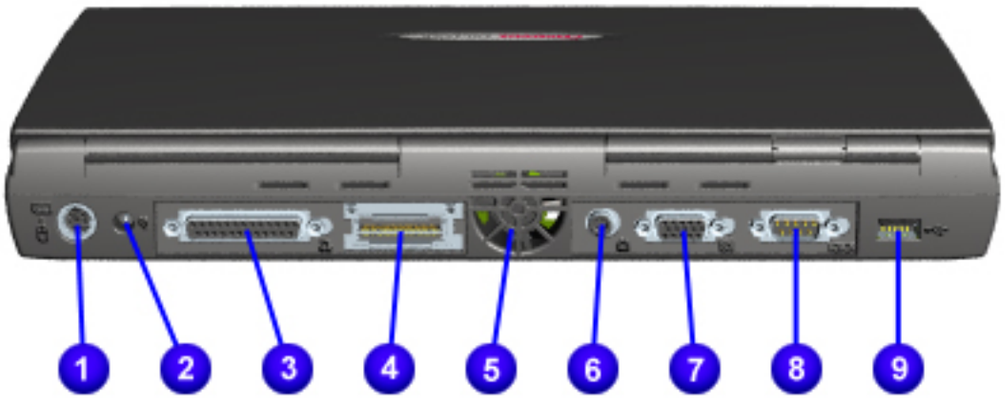

1. Keyboard/Mouse Port
2. AC Adapter Connector
3. Parallel Port
4. QuikDock Connector
5. Fan Vent
6. TV Out Connector
7. VGA External Monitor Port
8. Serial Port
9. Universal Serial Bus Port

Products Description

QuikDock Components

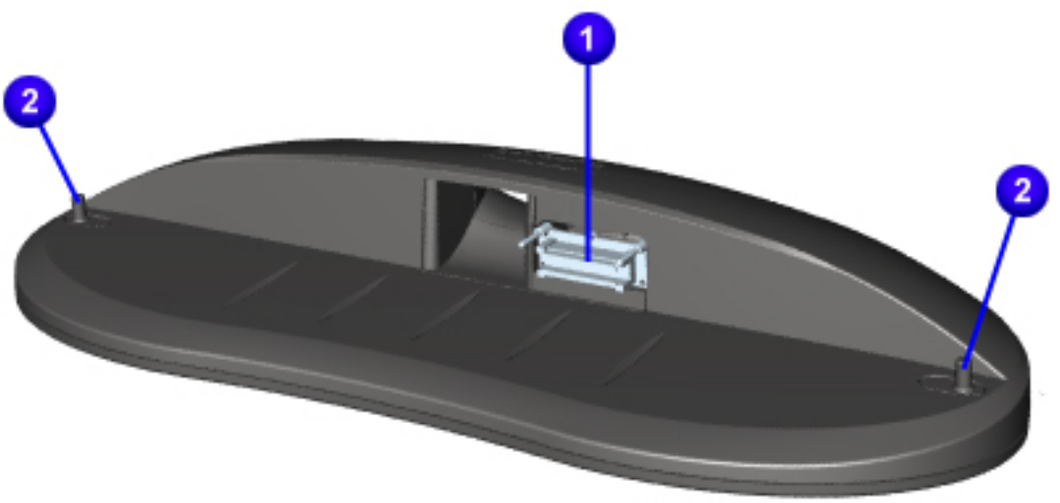

1. QuikDock Interface Connector
2. QuikDock Guide Posts

maintenance & service guide

Presario 1600 Series
Models: 1600T, 1600-XL140, 1600-XL141, 1600-XL142, 1600-XL143, 1600-XL144, 1600-XL145, 1600-XL146, 1600-XL147, and 1600-XL150

- Models and Features
- Controls and Lights
- Internet Zone Buttons and Lights
- Front Bezel Components
- Left Side Components
- Right Side Components
- Bottom of Unit
- Rear Connectors
- QuikDock Components
- QuikDock Connectors
- Power Management for Windows 98

Products Description

QuikDock Connectors

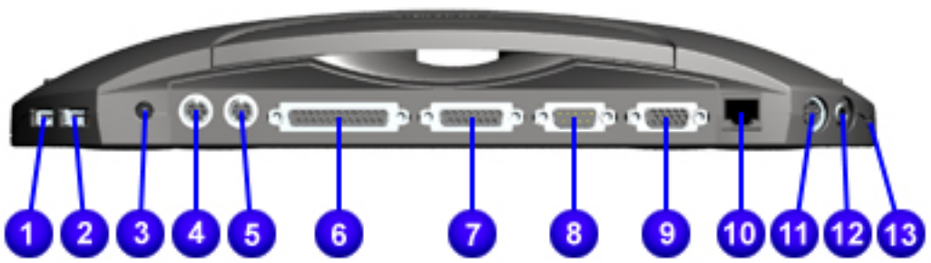

1. Universal Serial Bus Port
2. Universal Serial Bus Port
3. Power (AC Adapter)Connector
4. Mouse Port
5. Keyboard Port
6. Parallel Port
7. Game Port
8. Serial Port
9. External Monitor Port
10. 10/100TX Ethernet
11. S Video
12. (Composite) TV Out
13. Audio Out

Products Description

Power Management for Windows 98

The following power management features are available for conserving AC power and extending battery operating time:

- Power Management Settings
- Low-Power Modes
- Battery Operating Life
- Servicing the Computer (Full Off Mode)
- Rebooting After a Lockup
- Recovering From a Loss of Electrical Power

Power Management Settings

Differing patterns of computer use determine the level of power management needed. These power management levels can be initiated based on the amount of time passed since the last system activity. System activity examples include keyboard strokes or mouse movement, DVD/CD playback (while under program control that monitors Standby), and modem use.

Power Schemes

You may select different settings or Power Schemes through Power Management from the Control Panel. The default Power Schemes are **Home/Office Desk**, **Portable/Laptop**, and **Always On**. You can customize these settings by changing the following options:

- **System Standby**: length of inactivity before the computer goes into Standby mode
- **Turn Off Monitor**: length of inactivity before the screen times out and goes blank
- **Turn Off Hard Disks**: length of inactivity before the hard drive goes into low power mode

IMPORTANT:	• The setting for the Hard Drive must be less than or equal to the setting for the System. • If the computer is on a network, Compaq recommends **System Standby** be set to **Never**.

The following table shows the default settings for the each Power Scheme.

Power Schemes		
Always on	**AC Power**	**Battery Power**
System Standby Turn OFF Monitor Turn OFF Hard Disks	Never 15 minutes 1 hour	5 minutes 2 minutes 3 minutes
Portable/Laptop	**AC Power**	**Battery Power**
System Standby Turn OFF Monitor Turn OFF Hard Disks	Never 3 hours 15 minutes	15 minutes Never 10 minutes
Home/Office Desk	**AC Power**	**Battery Power**
System Standby Turn OFF Monitor Turn OFF Hard Disks	20 minutes 15 minutes 30 minutes	1 minute 2 minutes 10 minutes

Alarms

The computer can be set to alarm when the battery power level is reduced and/or when it reaches a critical low level. It can also be set to automatically enter a low-power mode when the battery reaches a specific power level.

△	**CAUTION:** The settings on the Alarms tab have been preset for the computer to run at its best. Changing any of these settings could cause the computer to function improperly. It is recommended that these settings be left at their default values.

Alarms		
Alarm	**Default**	**Alarm Action**
Low Battery	10%	Notification: Text Power Mode: No Action
Critical Battery	0%	Notification: No Action Power Mode: Hibernation

Top of Page

Low-Power Modes

Compaq Presario 1600 Series Computers have two levels of low-power management: **Hibernation** and **Standby** .

Hibernation

Hibernation helps conserve battery life and protect the data. The computer will automatically enter Hibernation mode when the battery has little power left or when the computer (operating on battery power) has been in Standby mode for more than one hour. As the computer enters Hibernation, it automatically stores the content of the computer memory to the hard drive before it shuts down. When the computer comes out of hibernation, it returns to its previous state.

Activate Hibernation mode by pressing the **Power** button once.

To restart the computer, press the **Power** button once. When the computer enters or wakes from Hibernation mode, it displays a Progress window.

Standby

Standby mode is a low-power mode, also referred to as Sleep mode. Selecting Standby mode instead of turning off the computer when finished allows the computer to wake up faster than turning it completely off and saves power over the active (On) mode.

Activate Sleep mode by pressing **Fn+F4**. Or, click **Start**, select the **Shut Down** option, and click **Standby**.

CAUTION: While in Standby mode, the computer will maintain system information and open files. Unsaved information will be lost if the computer is turned off prior to system wake-up, or if a power loss occurs while using the AC adapter.

The following table shows the conditions and indicators for entering and exiting the various power management modes, **Standby**, **Hibernation**, and **Off**.

Power Management Modes			
Standby	**Activation**	**Deactivation**	**Indicators**
Manual	**Fn+F4** Key combination or click the **Start** button on the Windows Taskbar, then point to **Shutdown** and click **Standby**.	Press any key.	Half-moon icon appears on the **Status Disqplay2**.
Time-out Default	15 minutes if using battery power. Computer will not automatically enter Standby mode if using AC Power.		
* **Moon** icon appears on status display (1600 Series only)			
Hibernate	**Activation**	**Deactivation**	**Indicators**
Manual	Press **Power** button once.	Press **Power** button once.	**Power** light is off, screen is blank**
Time-out Default	When battery is low or after 1 hour of Standby. Computer will not automatically enter Hibernation mode if using AC Power.		
** **Power** icon does not appear on status display (1600 Series only)			

OFF	Activation	Deactivation	Indicators
Standard	Perform normal Windows shutdown using the **Start** button on the Windows Taskbar.	Press **Power** button once.	**Power** light is off, screen is blank.
Manual	Press and hold down the **Power** button for 4 seconds.		

IMPORTANT:	The manual shutdown mode is not recommended unless the standard shutdown mode does not work.

Top of Page

Battery Operating Life

Battery operating life is affected by variables such as the following:

- Power conservation settings
- Hardware configuration
- Software applications
- Installed options
- Display brightness
- Hard drive usage
- Changes in operating temperature
- Type and number of installed PC Cards

For more information on increasing battery pack operating time, conditioning the battery pack, and disposing of a used battery pack, refer to *Battery Pack Operations*.

Top of Page

Servicing the Computer - Full Off Mode

The computer must be turned off *completely* when installing or replacing components in the system. Follow the instructions above for properly putting the computer into **Off** mode, unplug from the outlet, and remove the battery (see *Battery Pack Removal Sequence*).

Top of Page

Rebooting After a Lockup

To reboot the computer (as if from a cold start), when the keyboard is frozen or the screen is locked, press and hold down the **Power** button for at least four seconds, which will cause a manual shutdown. Then, restart it with a single press of the **Power** button. If it still does not recover, press the **Power** button and hold for four seconds to shut it down, then remove the battery or unplug the AC power for at least 30 seconds. Reinsert the battery or reconnect AC power and press the **Power** button once to reboot.

Top of Page

Recovering From a Loss of Electrical Power

Loss of electrical power will cause the Internet PC to automatically turn off. This may cause loss of data because the Microsoft Windows operating system is not able to properly close all files and programs.

Loss of power may be caused by one of the following:

- Electrical power service is interrupted.
- The power cord is accidentally disconnected.

If power surges or sags, the display and status lights may flicker, and the computer may automatically restart. If an improper shutdown occurs, ScanDisk, a Microsoft Windows utility program, will automatically run once power is restored. ScanDisk will determine if the improper shutdown caused any errors on the hard disk. These errors may occur if the Microsoft Windows operating system was not able to properly close all files before the shutdown. If no errors are found, the restart process will continue. If ScanDisk does detect errors, follow the instructions shown to continue the restart process. Work that was not saved prior to the lockup may be lost.

Use of a surge suppressor, line conditioner, or uninterruptible power supply (UPS) may protect the computer from damage caused by power surges or sags.

If a power failure occurs or the power cord disconnects while the computer is turned on, turn off the computer until normal service has been restored. ScanDisk may run to check the hard disk for errors caused by the improper shutdown the next time the computer turns on.

Top of Page

maintenance & service guide

Presario 1600 Series
Models: 1600T, 1600-XL140, 1600-XL141, 1600-XL142, 1600-XL143, 1600-XL144, 1600-XL145, 1600-XL146, 1600-XL147, and 1600-XL150

- System Unit
- Boards
- Display Assembly
- Mass Storage Devices
- Miscellaneous Cable Kit
- Miscellaneous Hardware Kit
- Miscellaneous Plastics Kit
- Miscellaneous Parts
- CTO Parts
- Documentation and Software

Parts Catalog

System Unit

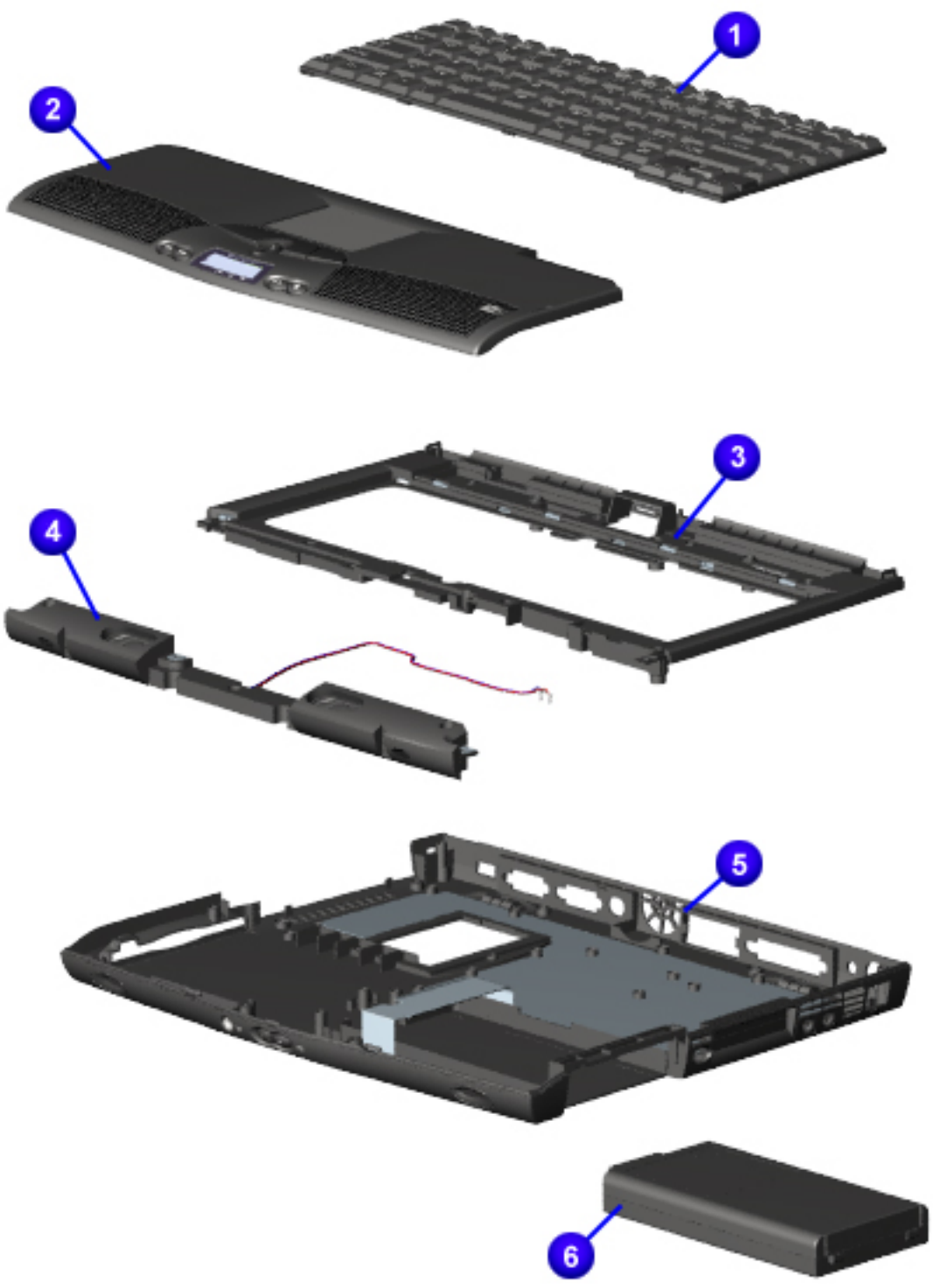

Spare Part Items

1. **Keyboards**
   170090-xxx
   US-001
   NL -331
   FR -051
   UK -031
   GR -041
   FR -051
   IT -061
   DEN-081
   NO-091
   SE-101
   LA-161
   SG-311
   NL-331
   BEL-381
   JP-291
2. **Palmrest Cover w/TouchPad and Button Board**
   159490-001
3. **Upper CPU Cover**
   159492-001
4. **Speakers w/Enclosure & Cables**
   159494-001
5. **Enclosure Base**
   159491-001
6. **Battery Pack LION Enhanced**
   138184-001
7. **Button Board Cover**
   (not shown)
   159493-001

maintenance & service guide

Presario 1600 Series
Models: 1600T, 1600-XL140, 1600-XL141, 1600-XL142, 1600-XL143, 1600-XL144, 1600-XL145, 1600-XL146, 1600-XL147, and 1600-XL150

- System Unit
- Boards
- Display Assembly
- Mass Storage Devices
- Miscellaneous Cable Kit
- Miscellaneous Hardware Kit
- Miscellaneous Plastics Kit
- Miscellaneous Parts
- CTO Parts
- Documentation and Software

Parts Catalog

Boards

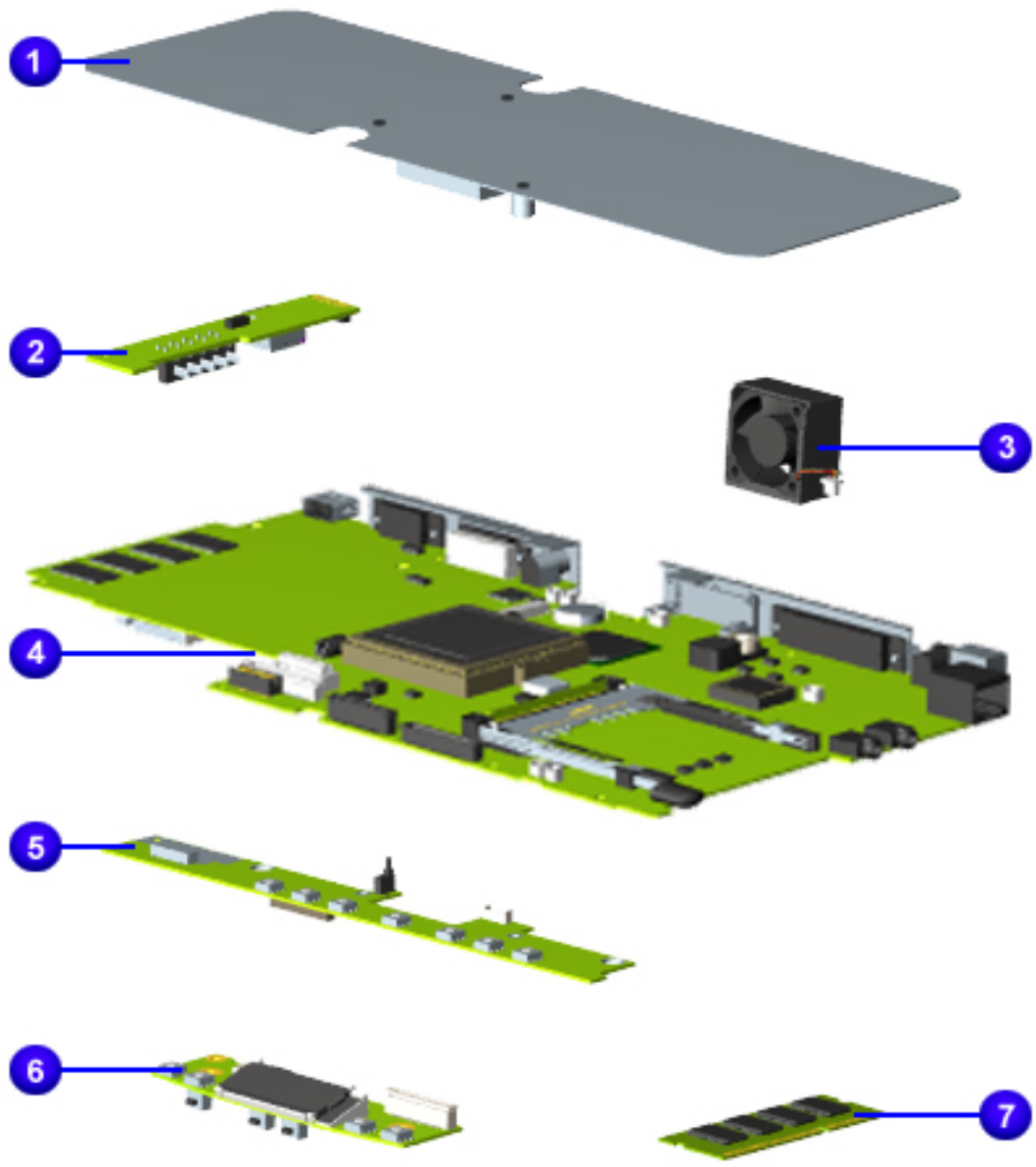

Spare Part Items

1. **Heatspreaders**
   159501-001
   174042-001
2. **Battery Charger Board**
   352891-001
3. **Fan Assembly**
   159500-001
4. **Processors Celeron 466MHz w/128K Cache**
   161491-001

   Celeron 500MHz w/128K Cache
   159484-001

   Pentium III 500MHz w/256K Cache
   161492-001

   Pentium III 600MHz w/256 Cache
   159485-001

   Pentium III 650MHz w/256 Cache
   175308-001
5. **Internet Switch Board**
   159495-001
6. **LCD Indicator Module**
   138187-001
7. **Memory** (SO Dimm)
   122699-001 (32MB, PC100)
   122700-001 (64MB, PC100)
   123930-001 (128MB)
8. **System Boards** I/O w/64MB SDRAM (Not Shown)
   159483-001
9. **Modems** K-56K Data/Fax w/o SRAM (Not Shown)
   171280-001 (US)
   159502-001 (Int'l)
   159502-011 (AU)

maintenance & service guide

Presario 1600 Series

Models: 1600T, 1600-XL140, 1600-XL141, 1600-XL142, 1600-XL143, 1600-XL144, 1600-XL145, 1600-XL146, 1600-XL147, and 1600-XL150

- System Unit
- Boards
- Display Assembly
- Mass Storage Devices
- Miscellaneous Cable Kit
- Miscellaneous Hardware Kit
- Miscellaneous Plastics Kit
- Miscellaneous Parts
- CTO Parts
- Documentation and Software

Parts Catalog

Display Assembly

Spare Part Items
Display Panel 12.1" TFT/LVDS 170091-001
Display Panel 14.1" TFT/LVDS 159486-001

- System Unit
- Boards
- Display Assembly
- Mass Storage Devices
- Miscellaneous Cable Kit
- Miscellaneous Hardware Kit
- Miscellaneous Plastics Kit
- Miscellaneous Parts
- CTO Parts
- Documentation and Software

Parts Catalog

Mass Storage Devices

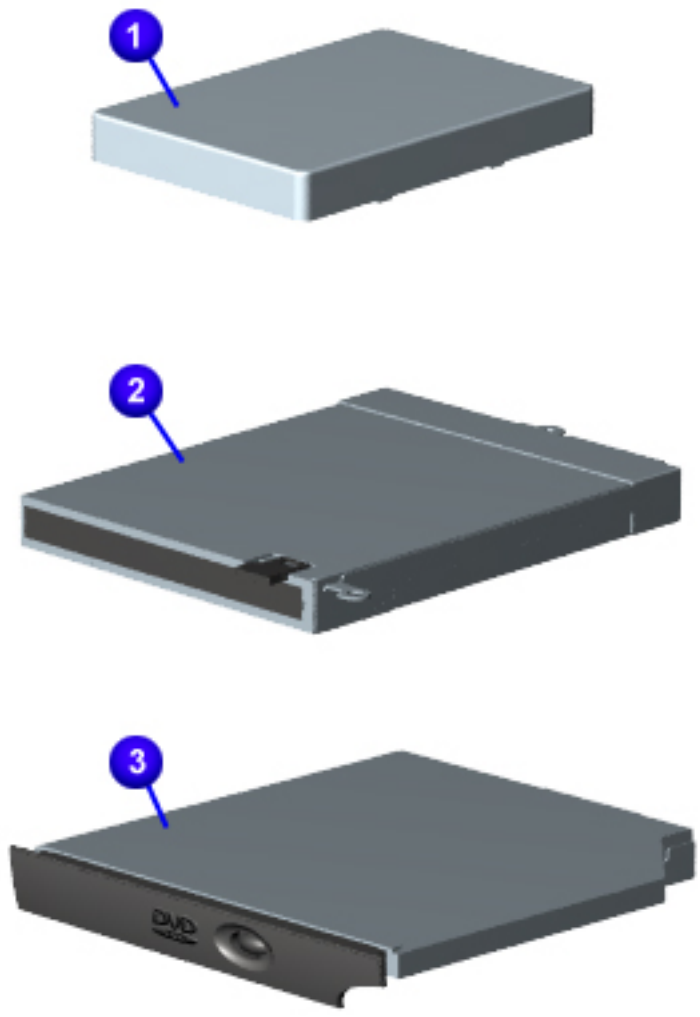

Spare Part Items

1. **Hard Drives**
   PN's: 170087-001 (6-GB)
   170086-001 (12-GB)
2. **1.44-MB Diskette Drive**
   PN: 159496-001
3. **DVD Drive**
   PN's: 159488-001 (6X)

   CD-ROM Drive 24X
   (not shown)
   PN: 159487
4. **CD-R/W Drive**
   (not shown)
   PN: 170085-001

System Unit
Boards
Display Assembly
Mass Storage Devices
Miscellaneous Cable Kit
Miscellaneous Hardware Kit
Miscellaneous Plastics Kit
Miscellaneous Parts
CTO Parts
Documentation and Software

Parts Catalog

Miscellaneous Cable Kit

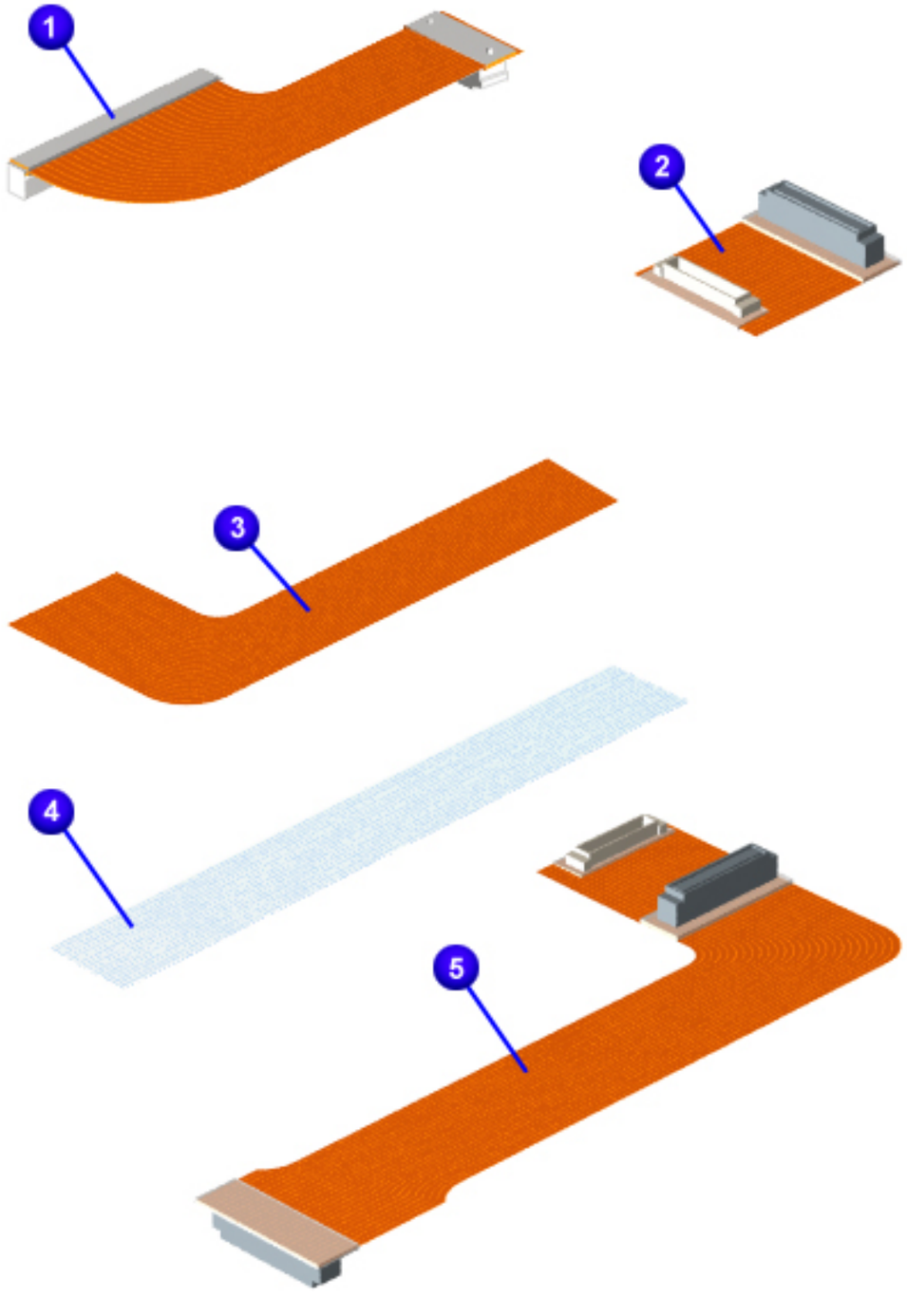

Spare Part Items

Miscellaneous Cable Kit*
PN: 159497-001

Kit includes one each of the following:

1. **Hard Drive Cable**
2. **CD/DVD Drive Cable**
3. **Diskette Drive Cable**
4. **Status Panel Cable**
5. **CD (DVD) Cable** (not applicable)
6. **Modem Cable** (not shown)
7. **TouchPad Cable** (not shown)

- System Unit
- Boards
- Display Assembly
- Mass Storage Devices
- Miscellaneous Cable Kit
- Miscellaneous Hardware Kit
- Miscellaneous Plastics Kit
- Miscellaneous Parts
- CTO Parts
- Documentation and Software

Parts Catalog

Miscellaneous Hardware Kit

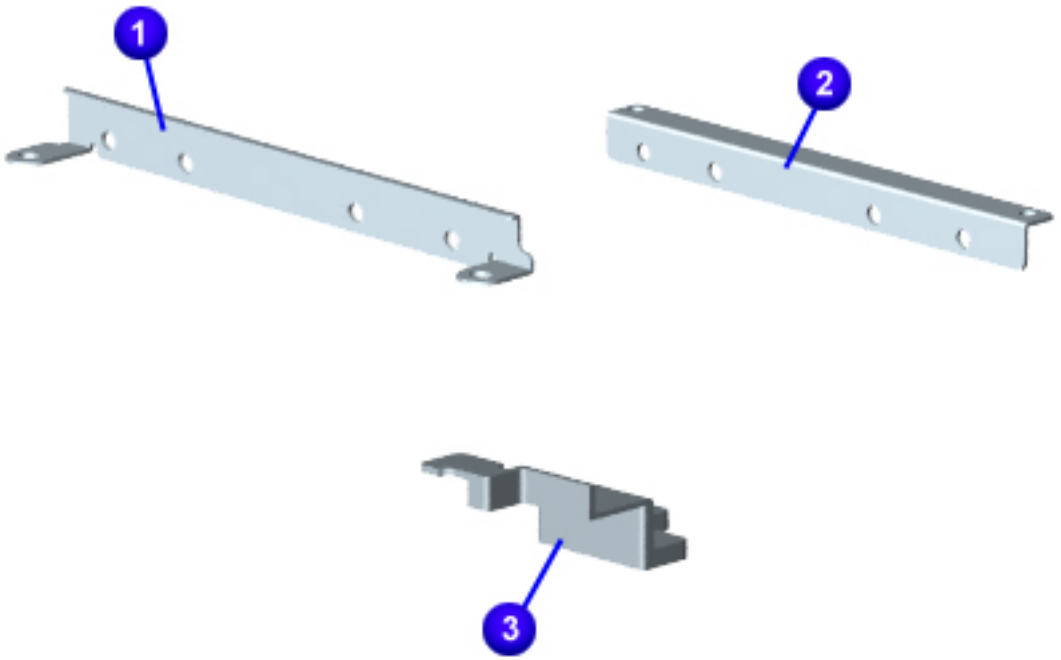

Spare Part Items

Miscellaneous Hardware Kit
159499-001

Kit includes one each of the following:

1. Hard Drive Mounting Bracket (right)
2. Hard Drive Mounting Bracket (left)
3. Reinforcement Bracket

maintenance & service guide

Presario 1600 Series

Models: 1600T, 1600-XL140, 1600-XL141, 1600-XL142, 1600-XL143, 1600-XL144, 1600-XL145, 1600-XL146, 1600-XL147, and 1600-XL150

- System Unit
- Boards
- Display Assembly
- Mass Storage Devices
- Miscellaneous Cable Kit
- Miscellaneous Hardware Kit
- Miscellaneous Plastics Kit
- Miscellaneous Parts
- CTO Parts
- Documentation and Software

Parts Catalog

Miscellaneous Plastics Kit

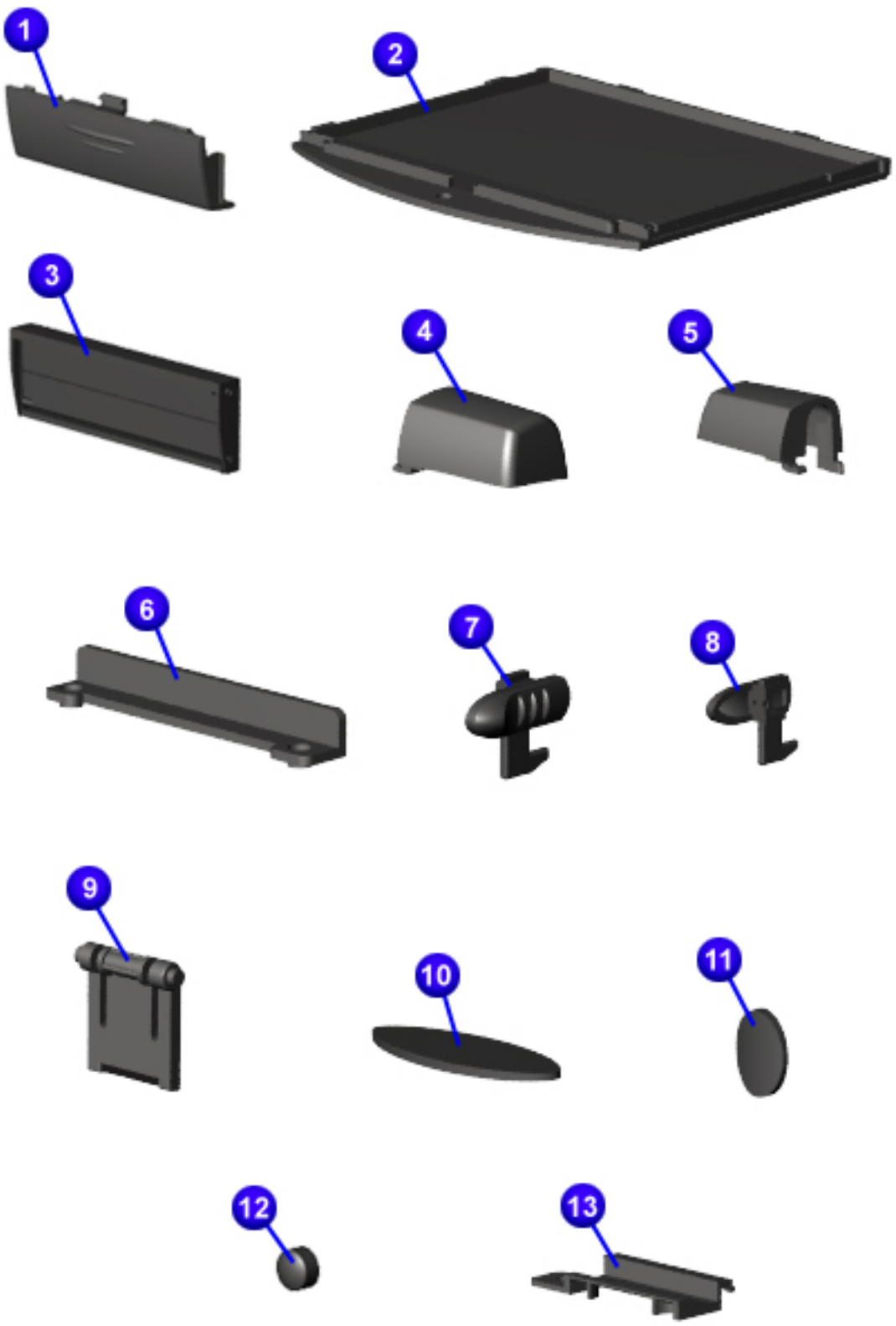

Spare Part Items

Miscellaneous Plastics Kit
PN: 159498-001

Kit includes one each of the following unless quantity stated:

1. **Battery Pack Door**
2. **Memory Module Cover**
3. **PCMCIA Door**
4. **Display Hinge Cover** (Right)
5. **Display Hinge Cover** (Left)
6. **CD Drive Guide**
7. **Latch** (Right) 10 each
8. **Latch** (Left) 10 each
9. **Stand-foot** 10 each
10. **Rubber Foot** 10 each
11. **Rubber Plug** (Side Mount for 14.1 inch Display) 10 each
12. **Rubber Plug**(not applicable to 1600 Series)
13. **Cover, LCD FPC**
14. **Rubber Plug, LCD**(not shown) 10 each
15. **Thin Rubber Plug, LCD** (14.1 inch Display)(not shown) 10 each

System Unit
Boards
Display Assembly
Mass Storage Devices
Miscellaneous Cable Kit
Miscellaneous Hardware Kit
Miscellaneous Plastics Kit
Miscellaneous Parts
CTO Parts
Documentation and Software

Parts Catalog

Miscellaneous Parts

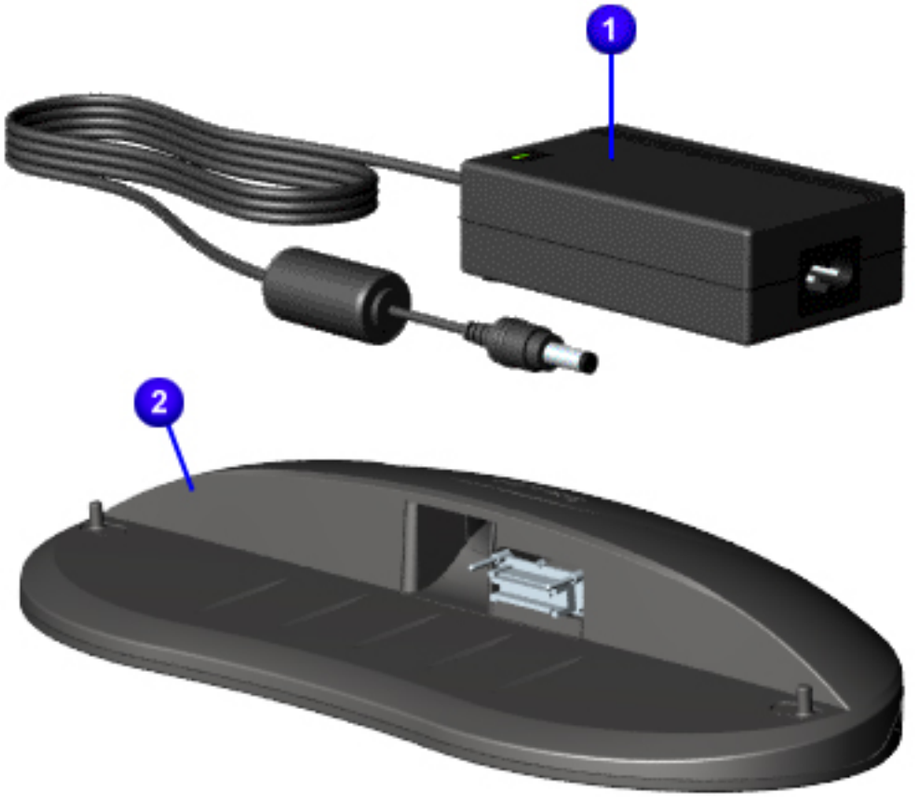

Spare Part Items

1. **AC Adapter**
   PN: 298239-001
   AC Adapter APD
   (not shown)
   PN: 164854-001
2. **QuikDock**
   138167-001
3. **Misc. Screw Kit**
   (not shown)
   138161-001
4. **Logo Kit**
   (not shown)
   169610-001
5. **Return Kit**
   (not shown)
   138166-001
6. **AC Power Cords:**
   (not shown)
   N. America
   PN: 293831-001
   Intl (3-Wire)
   PN: 170513-002
   UK (3-Wire)
   PN: 170513-031

Parts Catalog

Documentation and Software

Spare Parts	
Items	**Part Number**
Win98 2nd Edition Manual Kit	146642-001
Win2000 Professional Manual Kit	164286-001
Emergency Recovery CD Kit	157296-002
QuickRestore Kit	169300-001
Win98 Reference Guide	117894-003
Features Guide	120223-001
Quick Reference Guide	Information Not Available
QuickFind for Windows*	Information Not Available

*QuickFind is updated monthly. To complete the QuickFind part number, add the suffix from the table below for the desired month. If you do not specify the 3-digit suffix, the default is the current month in which the order is placed.

QuickFind Part Number Suffix			
Month	**Suffix**	**Month**	**Suffix**
January	-001	July	-007
February	-002	August	-008
March	-003	September	-009
April	-004	October	-010
May	-005	November	-011
June	-006	December	-012

Connector Pin Assignments

This section provides connector pin assignment tables for Compaq Presario 1600 Series Portable Computers. For additional information on connectors, refer to the sections on Rear Connectors and QuikDock Connectors.

NOTE:	The signals in all tables of this appendix are considered active high unless otherwise indicated by an asterisk (*).

External VGA Monitor

Connector	Pin	Signal
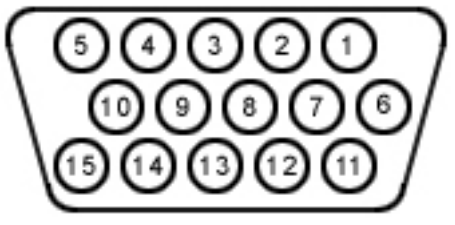	1	Red Analog
	2	Green Analog
	3	Blue Analog
	4	Not connected
	5	Ground
	6	Ground Analog
	7	Ground Analog
	8	Ground Analog
	9	+5V
	10	Ground
	11	Monitor Detect
	12	DDC2B Data
	13	Horizontal
	14	Sync
	15	Vertical Sync
		DDC2B Clock

TV Out

Connector	Pin	Signal
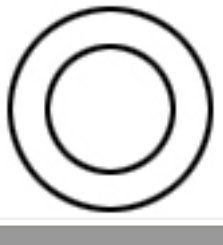	1	Ground
	2	Composite
	3	Ground

Top of Page

Connector Pin Assignments

This section provides connector pin assignment tables for Compaq Presario 1600 Series Portable Computers. For additional information on connectors, refer to the sections on Rear Connectors and QuikDock Connectors.

NOTE:	The signals in all tables of this appendix are considered active high unless otherwise indicated by an asterisk (*).

QuikDock Connector

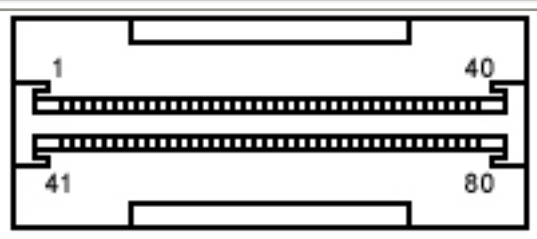

Pin	Signal	Pin	Signal	Pin	Signal	Pin	Signal
1	Adapter Power	22	Serial Port DCD	43	Keyboard Clock	64	MIDI Output
2	Adapter Power	23	Serial Port DSR	44	Keyboard Data	65	Headphone Sense
3	Adapter Power	24	Serial Port TXD	45	Mouse Clock	66	USB Power
4	Adapter Power	25	Serial Port RTS	46	Mouse Data	67	USB Power
5	Adapter Power	26	Monitor DDC	47	Lp Select	68	USB Power
6	Adapter Power	27	Monitor DDC	48	Lp Paper End	69	USB Power
7	Not Connected	28	Monitor Indicator	49	Lp Initialize	70	USB A-
8	Printer Data 0	29	V. SYNC	50	Lp Busy	71	USB A+
9	Printer Data 1	30	Ground	51	Lp Error	72	USB B-
10	Printer Data 2	31	H.SYNC	52	Lp Acknowledge	73	USB B+
11	Printer Data 3	32	Ground	53	Lp AutoFeed	74	5V
12	Printer Data 4	33	Blue	54	Lp Strobe	75	5V
13	Printer Data 5	34	Ground	55	Joystick Data A	76	Line Out Left
14	Printer Data 6	35	Green	56	Joystick Data B	77	S-Video SYR
15	Printer Data 7	36	Ground	57	Joystick Data C	78	Ground
16	Lp Indicator	37	Red	58	Joystick Data D	79	S-Video SCG
17	QuikDock Indicator	38	Ground	59	Switch A	80	Ground
18	Serial Port RXD	39	Composite TV Out	60	Switch B	81	Ground
19	Serial Port RI	40	Line Out Right	61	Switch C	82	Ground
20	Serial Port DTR	41	Line Out Present	62	Switch D		
21	Serial Port CTS	42	Power Cycle	63	MIDI Input		

Top of Page

Connector Pin Assignments

This section provides connector pin assignment tables for Compaq Presario 1600 Series Portable Computers. For additional information on connectors, refer to the sections on Rear Connectors and QuikDock Connectors.

NOTE:	The signals in all tables of this appendix are considered active high unless otherwise indicated by an asterisk (*).

S Video

Connector	Pin	Signal
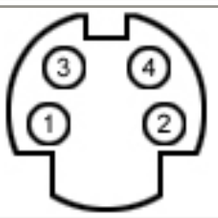	1 2 3 4	Ground Ground SYR SCG

Universal Serial Bus

Connector	Pin	Signal
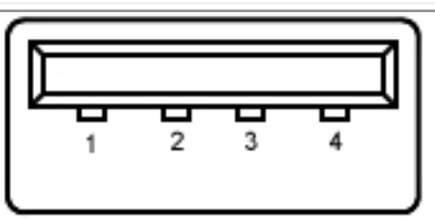	1 2 3 4	+5V Data - Data + Ground

Top of Page

Connector Pin Assignments

This section provides connector pin assignment tables for Compaq Presario 1800 Series Portable Computers. For additional information on connectors, refer to the sections on Rear Connectors and QuikDock Connectors.

NOTE:	The signals in all tables of this appendix are considered active high unless otherwise indicated by an asterisk (*).

Keyboard/Mouse

Connector	Pin	Signal
	1 2 3 4 5 6	Data 1 Data 2 Ground +5 V Clock 1 Clock 2

Modem

Connector	Pin	Signal
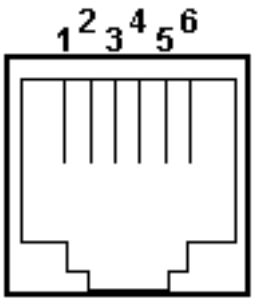	1 2 3 4 5 6	Unused Tip Ring Unused Unused Unused

Game Port

Connector	Pin	Signal
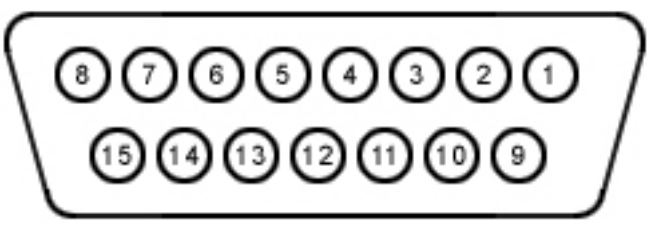	1 2 3 4 5 6 7 8 9 10 11 12 13 14 15	+5V SWA RBTA GND GND RBTB SWB +5V +5V SWC RBTC RMSO RBTD SWD RMSI

Top of Page

Removal Sequence

Electrostatic Discharge

A sudden discharge of static electricity from a finger or other conductor can destroy static-sensitive devices or microcircuitry. Often the spark is neither felt nor heard, but damage occurs. An electronic device exposed to electrostatic discharge (ESD) may not seem to be affected at all and will work perfectly throughout a normal cycle. Although, it may function normally for a while, it may be degraded in the internal layers, reducing its life expectancy.

Networks built into many integrated circuits provide some protection, but in many cases, the discharge contains enough power to alter device parameters or melt silicon junctions.

Generating Static

The table shows activities that generate static electricity and the associated electrostatic voltage level.

Typical Electrostatic Voltages

Event	Relative Humidity		
	10%	40%	55%
Walking across carpet	35,000 V	15,000 V	7,500 V
Walking across vinyl floor	12,000 V	5,000 V	3,000 V
Motions of bench worker	6,000 V	800 V	400 V
Removing DIPS from plastic tubes	2,000 V	700 V	400 V
Removing DIPS from vinyl trays	11,500 V	4,000 V	2,000 V
Removing DIPS from Styrofoam	14,500 V	5,000 V	3,500 V
Removing bubble pack from PCBs	26,000 V	20,000 V	7,000 V
Packing PCBs in foam-lined box	21,000 V	11,000 V	5,000 V

NOTE: 700 volts can degrade a product.

Removal Sequence

Service Considerations

Listed below are some of the considerations that you should keep in mind during the disassembly and assembly of the computer.

Tool and Software Requirements

You will need the following items to service the computer:

- Torx T-8 or T-9 screwdriver
- 5mm nut drivers (for screwlocks and standoffs)
- Small standard screwdriver
- Small Phillips screwdriver
- Diagnostics software

Screws

The screws used in the computer are not interchangeable. If an incorrect screw is used during the reassembly process, it can damage the unit. Compaq strongly recommends that all screws removed during disassembly be kept with the part that was removed, then returned to their proper locations.

IMPORTANT:	As each subassembly is removed from the computer, it should be placed away from the work area to prevent damage.

- Removal Sequence
- Electrostatic Discharge
- Service Considerations
- Cables and Connectors
- Preparing the Computer for Disassembly
- QuikDock
- Battery Pack
- Palmrest Cover with TouchPad
- Keyboard
- Status/Internet Zone Cover
- Internet Button Board
- Heatspreader
- Modem
- Hard Drive
- DisqPlay Module
- Processor
- CD or DVD Drive
- Display Panel Assembly
- Upper CPU Cover
- Fan Assembly
- RTC Battery
- Diskette Drive
- Battery Charger Board
- Speaker Assembly
- System Board
- Memory Module

Removal Sequence

Cables and Connectors

Most cables used throughout the unit are ribbon cables. Cables must be handled with extreme care to avoid damage. Apply only the tension required to seat or unseat the cables during insertion or removal from the connector. Handle cables by the connector whenever possible. In all cases, avoid bending, twisting, or tearing the cables, and ensure that the cables are routed in such a way that they cannot be caught or snagged by parts being removed or replaced.

Cables

Use the following precautions when handling cables to avoid damage to the cable or computer:

- Always handle cables by their connectors.
- Avoid bending, twisting, or pulling on the cables.
- Apply minimum required force when seating or unseating the cables from their connectors.
- Place the cables in such a manner that they cannot be caught or snagged by parts being removed or replaced.
- Handle flex cables with extreme care; they can tear easily.

CAUTION: When servicing these computers, ensure that cables are placed in their proper location during the reassembly process. Improper cable placement can cause severe damage to the unit.

The following illustrations show the proper placement for each cable:

- ZIF connector cable
- Hard drive ribbon cable
- CD or DVD drive ribbon cable
- Diskette drive ribbon cable
- Speaker Assembly cable
- Modem cable
- Keyboard ribbon cable

Connectors and Plastic Parts

Plastic parts can be damaged by the use of excessive force during disassembly and reassembly. When handling the plastic parts, use care. Apply pressure only at the points designated in the maintenance instructions.

- Removal Sequence
- Electrostatic Discharge
- Service Considerations
- Cables and Connectors
- Preparing the Computer for Disassembly
- Battery Pack
- Palmrest Cover with TouchPad
- Keyboard
- Status/Internet Zone Cover
- Internet Button Board
- Heatspreader
- Modem
- Hard Drive
- DisqPlay Module
- Processor
- CD or DVD Drive
- Display Panel Assembly
- Upper CPU Cover
- Fan Assembly
- RTC Battery
- Diskette Drive
- Battery Charger Board
- Speaker Assembly
- System Board
- Memory Module

Removal Sequence

Cables and Connectors

ZIF Connectors

The computer uses zero insertion force (ZIF) connectors on the system board.

CAUTION: A ZIF connector and its attached cable can be easily damaged. Handle only the connector slide when removing or replacing a cable. Never pull or twist on the cable while it is connected.

To remove a cable from a ZIF connector, lift both corners of the ZIF connector and slide simultaneously with constant light force.

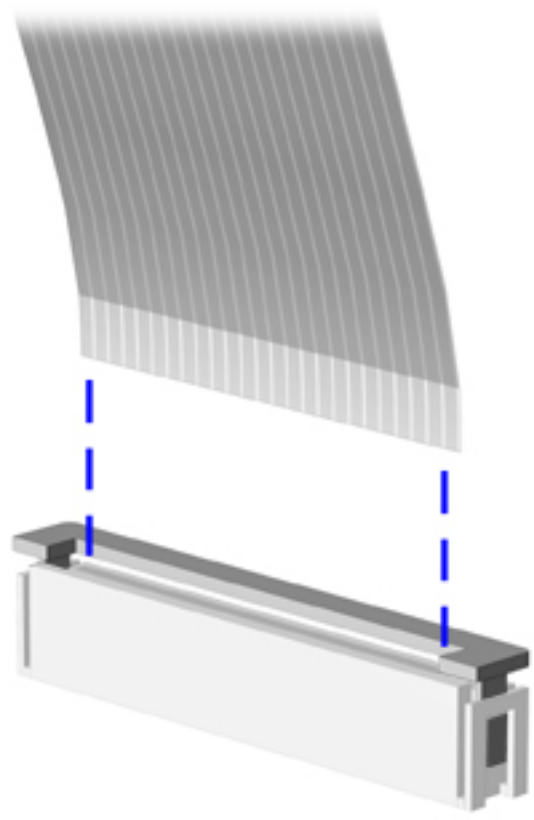

CAUTION: When servicing this computer, ensure that cables are placed in their proper location during the reassembly process. Improper cable placement can damage the computer.

Return to Cables and Connectors

Other cables illustrations:

- ZIF connector cable
- Hard drive ribbon cable
- CD or DVD drive ribbon cable
- Diskette drive ribbon cable
- Speaker Assembly cable
- Modem cable
- Keyboard ribbon cable

- Removal Sequence
- Electrostatic Discharge
- Service Considerations
- Cables and Connectors
- Preparing the Computer for Disassembly
- Battery Pack
- Palmrest Cover with TouchPad
- Keyboard
- Status/Internet Zone Cover
- Internet Button Board
- Heatspreader
- Modem
- Hard Drive
- DisqPlay Module
- Processor
- CD or DVD Drive
- Display Panel Assembly
- Upper CPU Cover
- Fan Assembly
- RTC Battery
- Diskette Drive
- Battery Charger Board
- Speaker Assembly
- System Board
- Memory Module

Removal Sequence

Cables and Connectors

Hard Drive Ribbon Cable

The ribbon cable position for the hard drive is shown below.

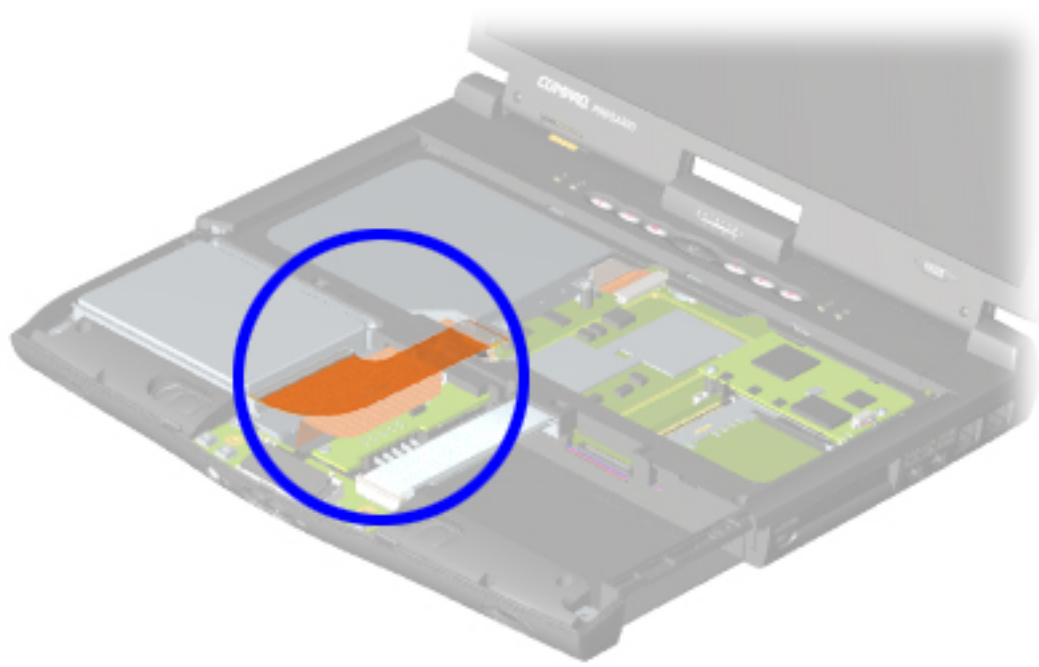

CAUTION: When servicing this computer, ensure that cables are placed in their proper location during the reassembly process. Improper cable placement can damage the computer.

Return to Cables and Connectors

Other cables illustrations:

- ZIF connector cable
- Hard drive ribbon cable
- CD or DVD drive ribbon cable
- Diskette drive ribbon cable
- Speaker Assembly cable
- Modem cable
- Keyboard ribbon cable

- Removal Sequence
- Electrostatic Discharge
- Service Considerations
- Cables and Connectors
- Preparing the Computer for Disassembly
- Battery Pack
- Palmrest Cover with TouchPad
- Keyboard
- Status/Internet Zone Cover
- Internet Button Board
- Heatspreader
- Modem
- Hard Drive
- DisqPlay Module
- Processor
- CD or DVD Drive
- Display Panel Assembly
- Upper CPU Cover
- Fan Assembly
- RTC Battery
- Diskette Drive
- Battery Charger Board
- Speaker Assembly
- System Board
- Memory Module

Removal Sequence

Cables and Connectors

CD or DVD Ribbon Cable

The ribbon cable position for the CD or DVD drive is shown below.

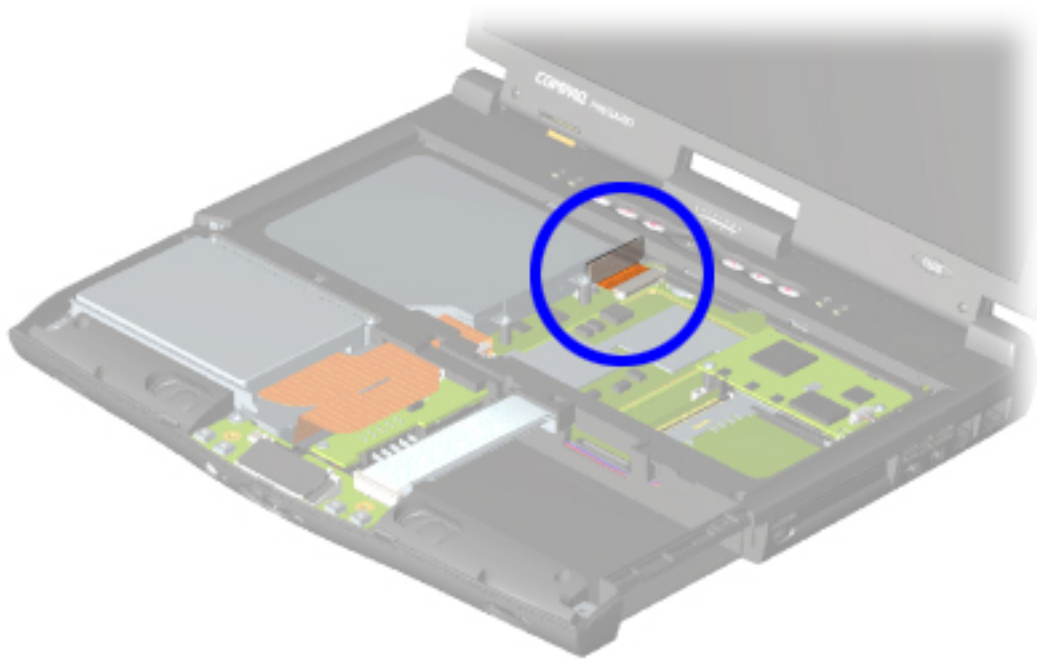

CAUTION: When servicing this computer, ensure that cables are placed in their proper location during the reassembly process. Improper cable placement can damage the computer.

Return to Cables and Connectors

Other cables illustrations:

- ZIF connector cable
- Hard drive ribbon cable
- CD or DVD drive ribbon cable
- Diskette drive ribbon cable
- Speaker Assembly cable
- Modem cable
- Keyboard ribbon cable

- Removal Sequence
- Electrostatic Discharge
- Service Considerations
- Cables and Connectors
- Preparing the Computer for Disassembly
- Battery Pack
- Palmrest Cover with TouchPad
- Keyboard
- Status/Internet Zone Cover
- Internet Button Board
- Heatspreader
- Modem
- Hard Drive
- DisqPlay Module
- Processor
- CD or DVD Drive
- Display Panel Assembly
- Upper CPU Cover
- Fan Assembly
- RTC Battery
- Diskette Drive
- Battery Charger Board
- Speaker Assembly
- System Board
- Memory Module

Removal Sequence

Cables and Connectors

Diskette Drive Ribbon Cable

The ribbon cable position for the diskette drive is shown below.

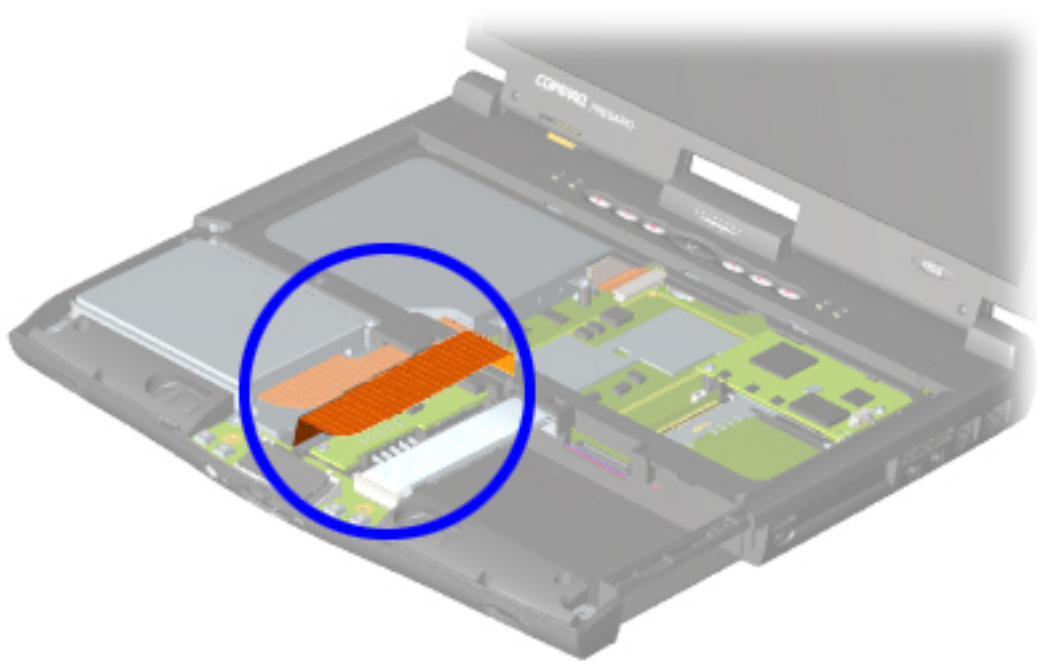

CAUTION: When servicing this computer, ensure that cables are placed in their proper location during the reassembly process. Improper cable placement can damage the computer.

Return to Cables and Connectors

Other cables illustrations:

- ZIF connector cable
- Hard drive ribbon cable
- CD or DVD drive ribbon cable
- Diskette drive ribbon cable
- Speaker Assembly cable
- Modem cable
- Keyboard ribbon cable

- Removal Sequence
- Electrostatic Discharge
- Service Considerations
- Cables and Connectors
- Preparing the Computer for Disassembly
- Battery Pack
- Palmrest Cover with TouchPad
- Keyboard
- Status/Internet Zone Cover
- Internet Button Board
- Heatspreader
- Modem
- Hard Drive
- DisqPlay Module
- Processor
- CD or DVD Drive
- Display Panel Assembly
- Upper CPU Cover
- Fan Assembly
- RTC Battery
- Diskette Drive
- Battery Charger Board
- Speaker Assembly
- System Board
- Memory Module

Removal Sequence

Cables and Connectors

Speaker Assembly Cable

The cable position for the speaker assembly is shown below. The cable is routed under the battery charger board and under the edge of the system board.

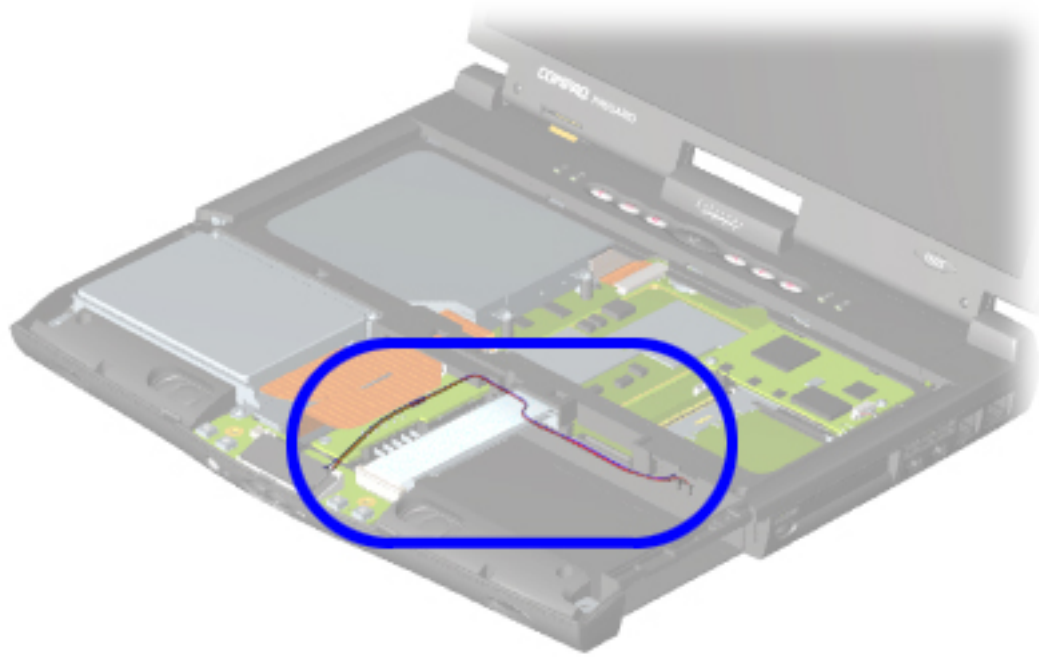

CAUTION: When servicing this computer, ensure that cables are placed in their proper location during the reassembly process. Improper cable placement can damage the computer.

Return to Cables and Connectors

Other cables illustrations:

- ZIF connector cable
- Hard drive ribbon cable
- CD or DVD drive ribbon cable
- Diskette drive ribbon cable
- Speaker Assembly cable
- Modem cable
- Keyboard ribbon cable

Removal Sequence

Cables and Connectors

Modem Cable

The modem does not have cables.

Return to Cables and Connectors
Other cables illustrations:

- ZIF connector cable
- Hard drive ribbon cable
- CD or DVD drive ribbon cable
- Diskette drive ribbon cable
- Speaker Assembly cable
- Modem cable
- Keyboard ribbon cable

Removal Sequence

Cables and Connectors

Keyboard Ribbon Cable

The ribbon cable position for the keyboard is shown below.

CAUTION: When servicing this computer, ensure that cables are placed in their proper location during the reassembly process. Improper cable placement can damage the computer.

Return to Cables and Connectors

Other cable illustrations:

- ZIF connector cable
- Hard drive ribbon cable
- CD or DVD drive ribbon cable
- Diskette drive ribbon cable
- Speaker Assembly cable
- Modem cable
- Keyboard ribbon cable

- Removal Sequence
- Electrostatic Discharge
- Service Considerations
- Cables and Connectors
- Preparing the Computer for Disassembly
- QuikDock
- Battery Pack
- Palmrest Cover with TouchPad
- Keyboard
- Status/Internet Zone Cover
- Internet Button Board
- Heatspreader
- Modem
- Hard Drive
- DisqPlay Module
- Processor
- CD or DVD Drive
- Display Panel Assembly
- Upper CPU Cover
- Fan Assembly
- RTC Battery
- Diskette Drive
- Battery Charger Board
- Speaker Assembly
- System Board
- Memory Module

Removal Sequence

Preparing the Computer for Disassembly

Before beginning Removal & Replacement Procedures, complete the following steps:

1. Disconnect AC power and any external devices.
2. Remove the QuikDock.
3. Remove the battery pack.
4. Remove any PC Cards.

IMPORTANT:	The battery pack should be removed before performing any internal maintenance on the computer.

	WARNING: Metal objects can damage the battery pack as well as the battery contacts in the battery compartment. To prevent damage, do not allow metal objects to touch the battery contacts. Place only the battery pack for the Compaq Presario 1600 Series Portable Computers into the battery compartment. Do not force the battery pack into the bay if insertion does not occur easily.

	CAUTION: Do not crush, puncture, or incinerate the battery pack. Do not open a battery pack, as this damages the pack, makes it unusable, and exposes potentially harmful battery components. There are no field-serviceable parts located inside the battery pack.

NOTE:	The Compaq Presario 1600 Series Portable Computers have several screws of various sizes which are **not** interchangeable. Care must be taken during reassembly to ensure that the correct screws are used in their correct location. During removal please keep respective screws with their associated sub-assembly.

- Removal Sequence
- Electrostatic Discharge
- Service Considerations
- Cables and Connectors
- Preparing the Computer for Disassembly
- QuikDock
- Battery Pack
- Palmrest Cover with TouchPad
- Keyboard
- Status/Internet Zone Cover
- Internet Button Board
- Heatspreader
- Modem
- Hard Drive
- DisqPlay Module
- Processor
- CD or DVD Drive
- Display Panel Assembly
- Upper CPU Cover
- Fan Assembly
- RTC Battery
- Diskette Drive
- Battery Charger Board
- Speaker Assembly
- System Board
- Memory Module

Removal Sequence

Removing the QuikDock

To remove the QuikDock, complete the following steps:

1. Lift up the handle on top of the QuikDock.
2. Lift the computer straight up.

- Removal Sequence
- Electrostatic Discharge
- Service Considerations
- Cables and Connectors
- Preparing the Computer for Disassembly
- QuikDock
- Battery Pack
- Palmrest Cover with TouchPad
- Keyboard
- Status/Internet Zone Cover
- Internet Button Board
- Heatspreader
- Modem
- Hard Drive
- DisqPlay Module
- Processor
- CD or DVD Drive
- Display Panel Assembly
- Upper CPU Cover
- Fan Assembly
- RTC Battery
- Diskette Drive
- Battery Charger Board
- Speaker Assembly
- System Board
- Memory Module

Removal Sequence

Removing the Battery Pack

To remove the battery pack, complete the following steps:

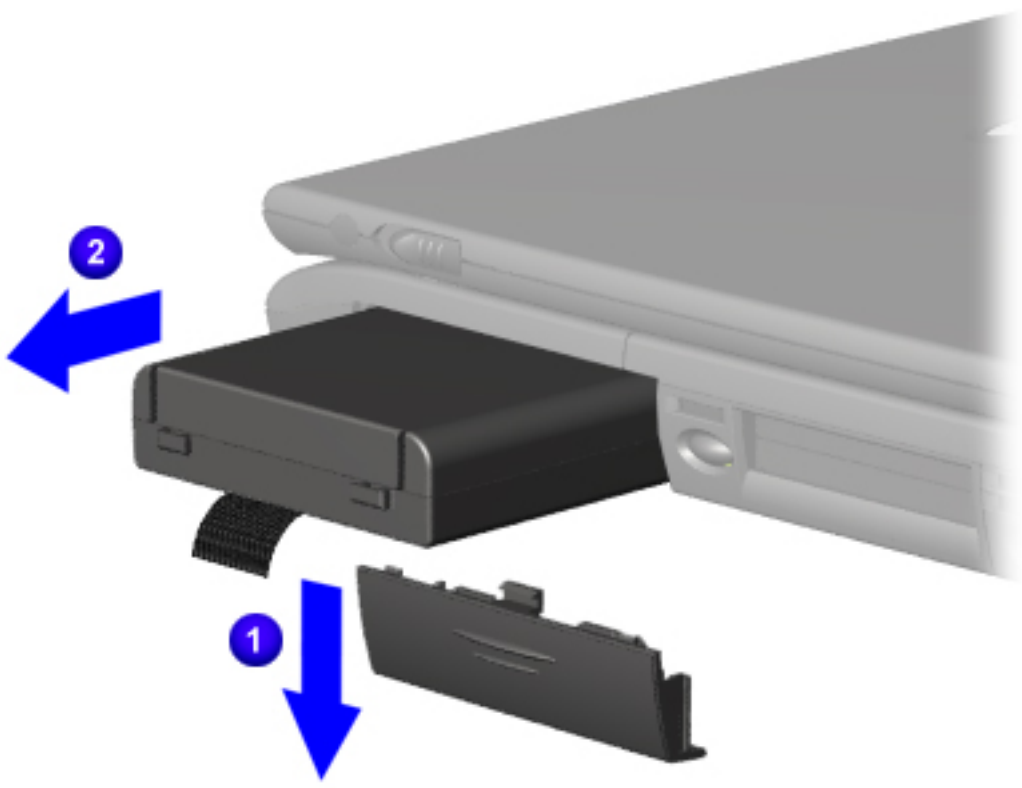

1. Slide the battery pack compartment door down and remove it from the chassis.
2. Pull the battery pack from the chassis by the tab located on the end of the battery pack.

To replace the battery pack, reverse the previous procedures.

IMPORTANT:	The battery pack should be removed before performing any internal maintenance on the computer.

⚠	**WARNING:** Metal objects can damage the battery pack as well as the battery contacts in the battery compartment. To prevent damage, do not allow metal objects to touch the battery contacts. Place only the battery pack for the Compaq Presario 1800 Series Portable Computers into the battery compartment. Do not force the battery pack into the bay if insertion does not occur easily.

⚠	**CAUTION:** Do not crush, puncture, or incinerate the battery pack. Do not open a battery pack, as this damages the pack, makes it unusable, and exposes potentially harmful battery components. There are no field-serviceable parts located inside the battery pack.

- Removal Sequence
- Electrostatic Discharge
- Service Considerations
- Cables and Connectors
- Preparing the Computer for Disassembly
- QuikDock
- Battery Pack
- Palmrest Cover with TouchPad
- Keyboard
- Status/Internet Zone Cover
- Internet Button Board
- Heatspreader
- Modem
- Hard Drive
- DisqPlay Module
- Processor
- CD or DVD Drive
- Display Panel Assembly
- Upper CPU Cover
- Fan Assembly
- RTC Battery
- Diskette Drive
- Battery Charger Board
- Speaker Assembly
- System Board
- Memory Module

Removal Sequence

Removing the Palmrest Cover with TouchPad

NOTE:	It is not necessary to remove the display panel assembly to access the interior components of the computer.

To remove the palmrest cover with TouchPad, complete the following steps:

1. Prepare the computer for disassembly.
2. Close the display assembly and turn the computer upside down.
3. Remove four screws from underneath the computer and 1 screw from the right-side of the computer.

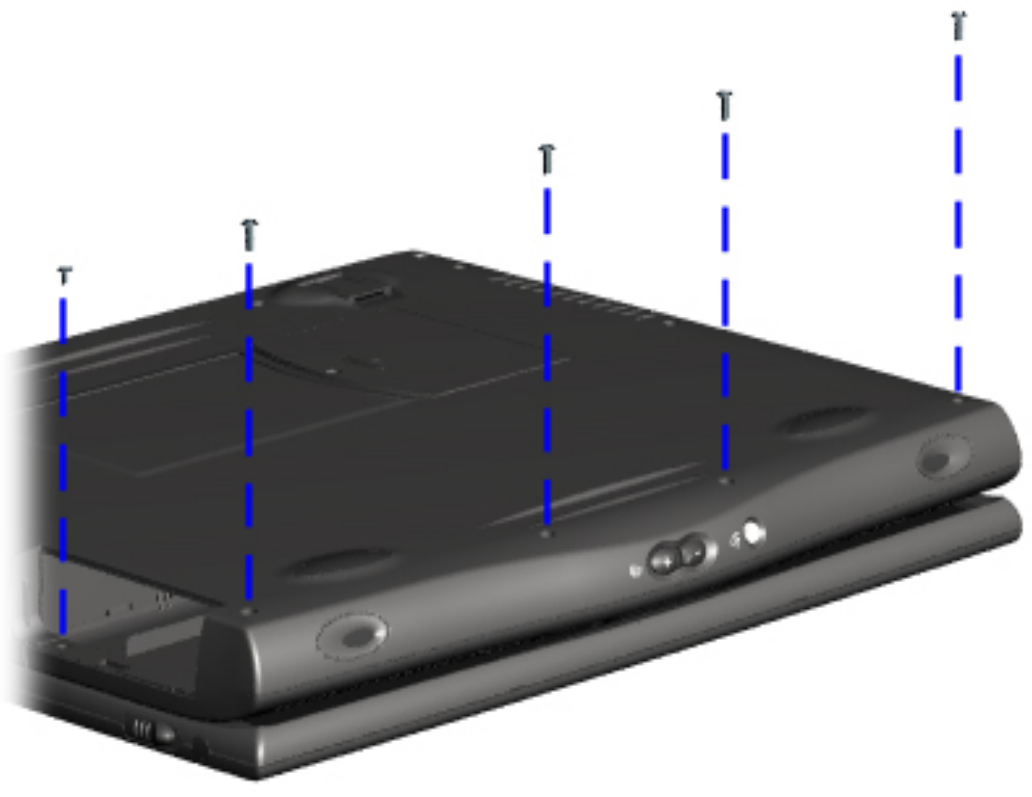

Next Step

- Removal Sequence
- Electrostatic Discharge
- Service Considerations
- Cables and Connectors
- Preparing the Computer for Disassembly
- QuikDock
- Battery Pack
- Palmrest Cover with TouchPad
- Keyboard
- Status Panel
- Internet Button Board
- Heatspreader
- Modem
- Hard Drive
- DisqPlay Module
- Processor
- CD or DVD Drive
- Display Panel Assembly
- Upper CPU Cover
- Fan Assembly
- RTC Battery
- Diskette Drive
- Voltage Converter Board
- Speaker Assembly
- System Board
- Memory Module

Removal Sequence

Removing the Palmrest Cover with TouchPad, continued

4. Turn the computer right side up.

5. Pull the display release latches and open the display assembly.

6. Lift up the front end of the Palmrest Cover with TouchPad and remove it from the groove in the chassis.

Previous Step

Next Step

- Removal Sequence
- Electrostatic Discharge
- Service Considerations
- Cables and Connectors
- Preparing the Computer for Disassembly
- QuikDock
- Battery Pack
- Palmrest Cover with TouchPad
- Keyboard
- Status Panel
- Internet Button Board
- Heatspreader
- Modem
- Hard Drive
- DisqPlay Module
- Processor
- CD or DVD Drive
- Display Panel Assembly
- Upper CPU Cover
- Fan Assembly
- RTC Battery
- Diskette Drive
- Voltage Converter Board
- Speaker Assembly
- System Board
- Memory Module

Removal Sequence

Removing the Palmrest Cover with TouchPad, continued

7. Disconnect the flex cable from the ZIF connector on the DisqPlay Module.

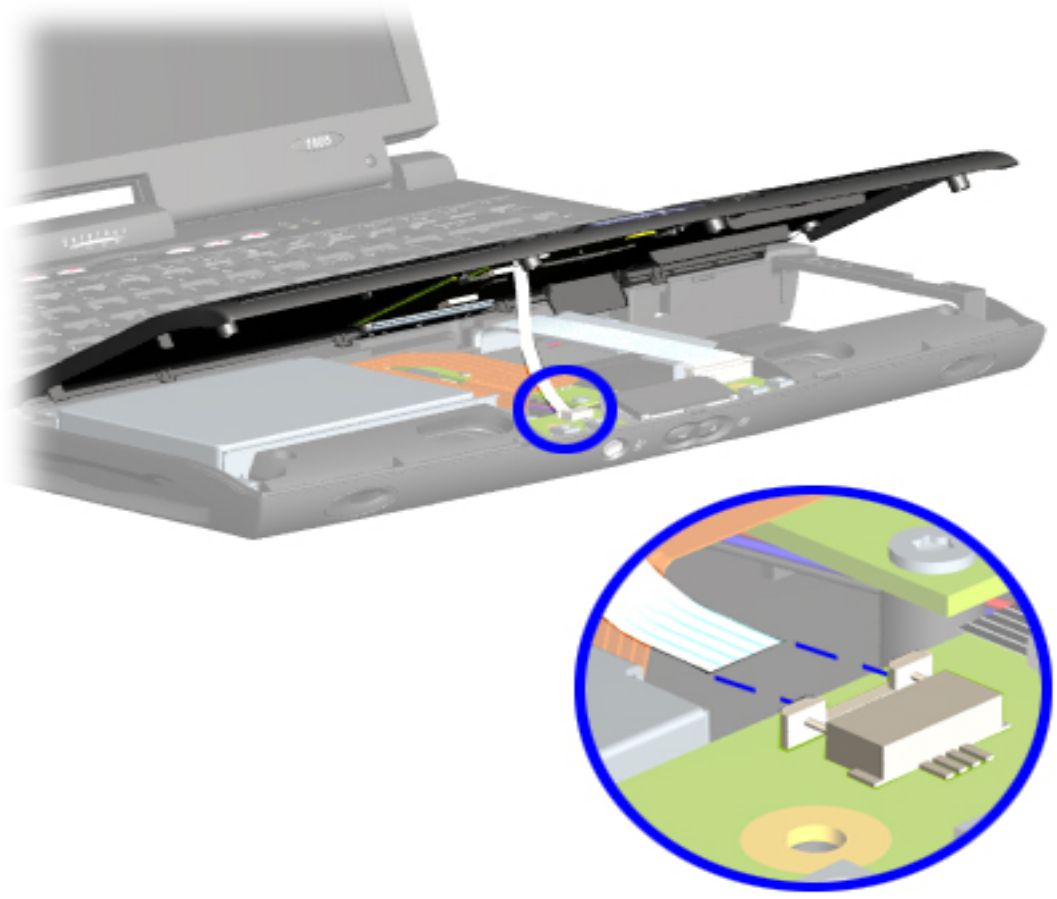

To replace the Palmrest Cover with TouchPad, reverse the previous procedures.

Previous Step

- Removal Sequence
- Electrostatic Discharge
- Service Considerations
- Cables and Connectors
- Preparing the Computer for Disassembly
- QuikDock
- Battery Pack
- Palmrest Cover with TouchPad
- Keyboard
- Status/Internet Zone Cover
- Internet Button Board
- Heatspreader
- Modem
- Hard Drive
- DisqPlay Module
- Processor
- CD or DVD Drive
- Display Panel Assembly
- Upper CPU Cover
- Fan Assembly
- RTC Battery
- Diskette Drive
- Battery Charger Board
- Speaker Assembly
- System Board
- Memory Module

Removal Sequence

Removing the Keyboard

To remove the keyboard, complete the following steps:

1. Prepare the computer for disassembly.
2. Remove the Palmrest Cover with TouchPad.
3. Gently lift up the front of the keyboard and disconnect the flex cable from the ZIF connector on the system board and remove the keyboard.

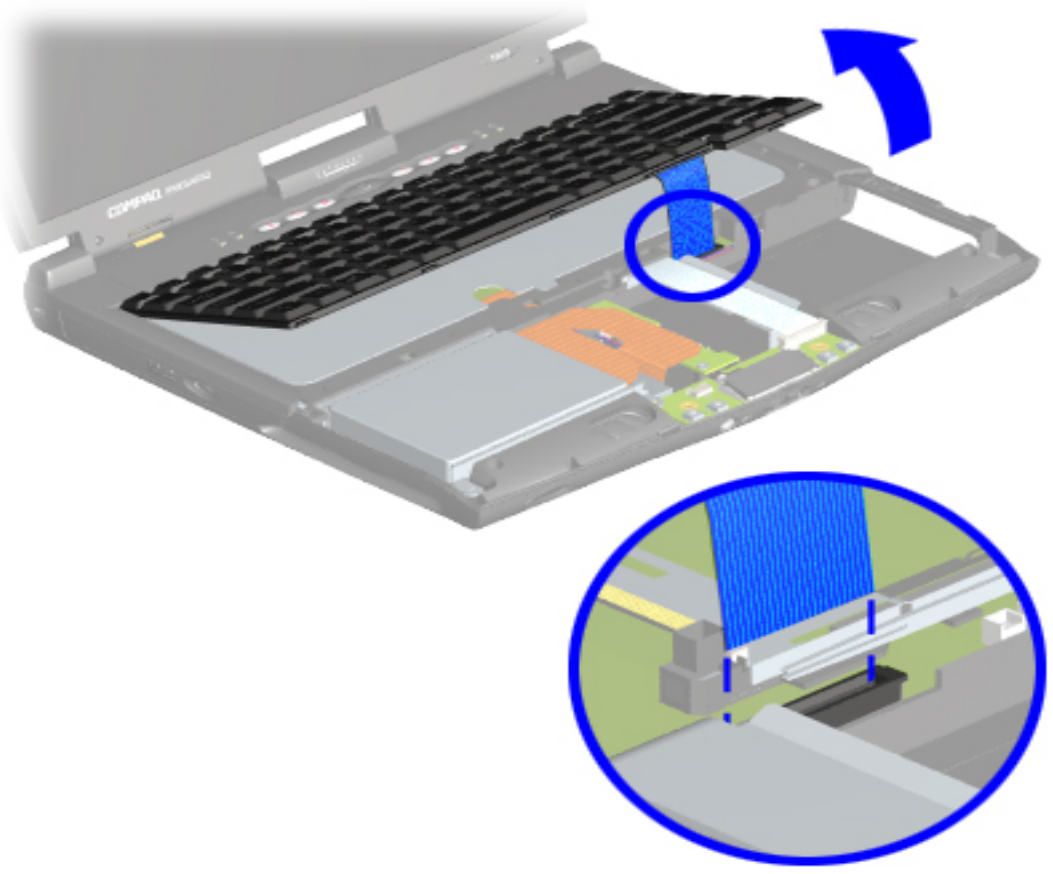

To replace the keyboard, reverse the previous procedures.

NOTE:	When replacing the keyboard, the keyboard cable should fold behind the ZIF connector rather than underneath the keyboard.

- Removal Sequence
- Electrostatic Discharge
- Service Considerations
- Cables and Connectors
- Preparing the Computer for Disassembly
- QuikDock
- Battery Pack
- Palmrest Cover with TouchPad
- Keyboard
- Status/Internet Zone Cover
- Internet Button Board
- Heatspreader
- Modem
- Hard Drive
- DisqPlay Module
- Processor
- CD or DVD Drive
- Display Panel Assembly
- Upper CPU Cover
- Fan Assembly
- RTC Battery
- Diskette Drive
- Battery Charger Board
- Speaker Assembly
- System Board
- Memory Module

Removal Sequence

Removing the Status/Internet Zone Cover
(Status Panel Assembly)

NOTE:	Illustrations may show parts removed that are not part of this procedure. It is necessary to remove only the parts listed in the written procedure.

To remove the Status/Internet Zone Cover, complete the following steps:

1. Prepare the computer for disassembly.
2. Open the display assembly and squeeze the sides of the display assembly hinge covers while sliding them off the hinges.

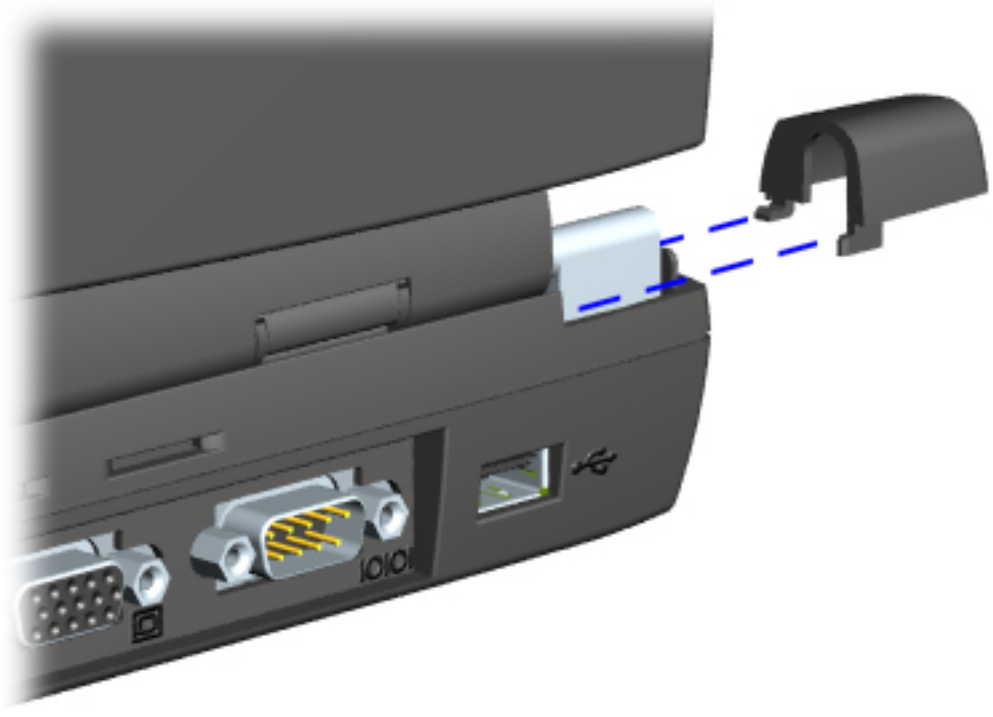

Next Step

- Removal Sequence
- Electrostatic Discharge
- Service Considerations
- Cables and Connectors
- Preparing the Computer for Disassembly
- Battery Pack
- Palmrest Cover with TouchPad
- QuikDock
- Keyboard
- Status/Internet Zone Cover
- Internet Button Board
- Heatspreader
- Modem
- Hard Drive
- DisqPlay Module
- Processor
- CD or DVD Drive
- Display Panel Assembly
- Upper CPU Cover
- Fan Assembly
- RTC Battery
- Diskette Drive
- Voltage Converter Board
- Speaker Assembly
- System Board
- Memory Module

Removal Sequence

Removing the Status/Internet Zone Cover, continued

3. Remove two innermost screws from the display assembly hinges which secure the status panel to the chassis.

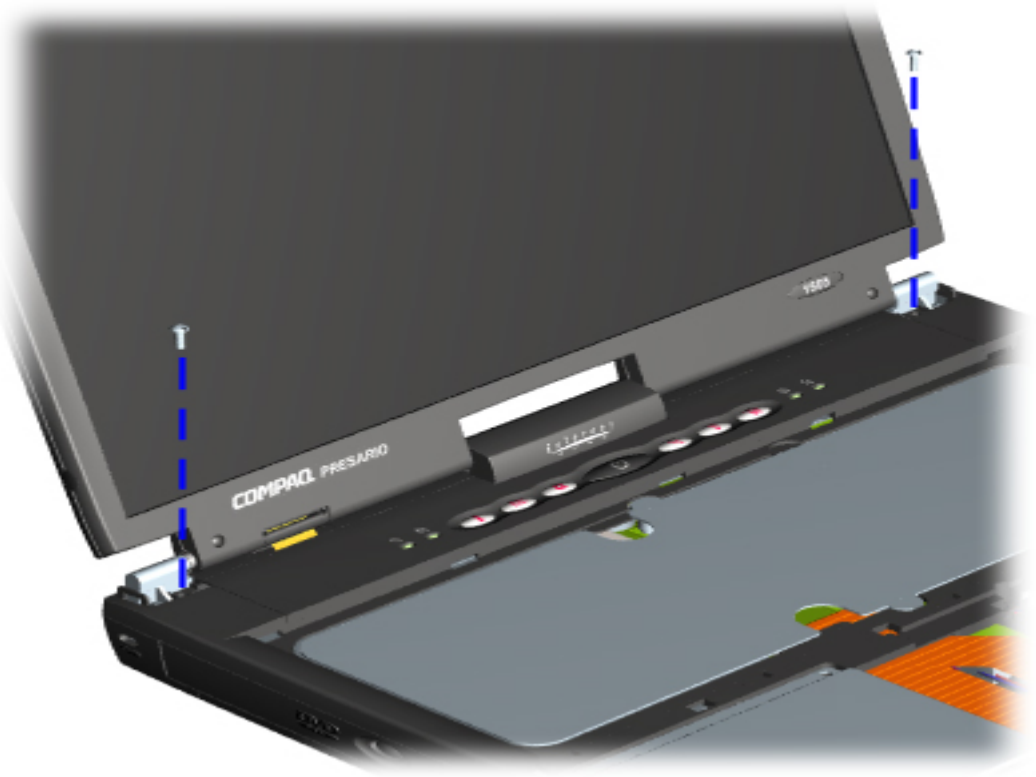

Previous Step

Next Step

- Removal Sequence
- Electrostatic Discharge
- Service Considerations
- Cables and Connectors
- Preparing the Computer for Disassembly
- QuikDock
- Battery Pack
- Palmrest Cover with TouchPad
- Keyboard
- Status/Internet Zone Cover
- Internet Button Board
- Heatspreader
- Modem
- Hard Drive
- DisqPlay Module
- Processor
- CD or DVD Drive
- Display Panel Assembly
- Upper CPU Cover
- Fan Assembly
- RTC Battery
- Diskette Drive
- Voltage Converter Board
- Speaker Assembly
- System Board
- Memory Module

Removal Sequence

Removing the Status/Internet Zone Cover, continued

4. Turn the unit upside down and remove two screws that secure the Status/Internet Zone Cover to the chassis located in the back of the computer.

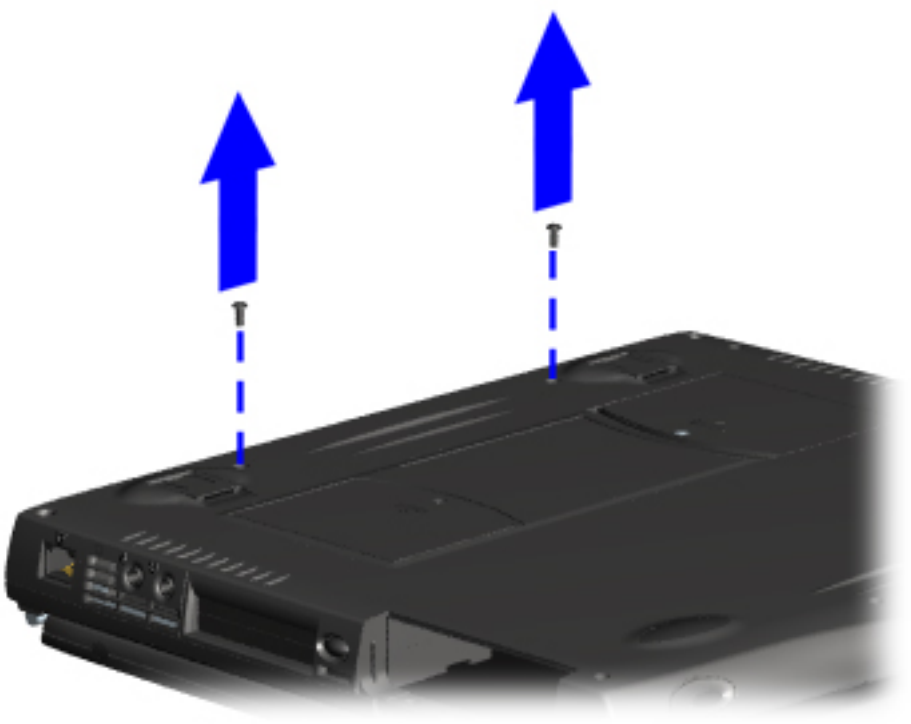

Previous Step

Next Step

- Removal Sequence
- Electrostatic Discharge
- Service Considerations
- Cables and Connectors
- Preparing the Computer for Disassembly
- QuikDock
- Battery Pack
- Palmrest Cover with TouchPad
- Keyboard
- Status/Internet Zone Cover
- Internet Button Board
- Heatspreader
- Modem
- Hard Drive
- DisqPlay Module
- Processor
- CD or DVD Drive
- Display Panel Assembly
- Upper CPU Cover
- Fan Assembly
- RTC Battery
- Diskette Drive
- Voltage Converter Board
- Speaker Assembly
- System Board
- Memory Module

Removal Sequence

Removing the Status/Internet Zone Cover, continued

5. Turn the unit right side up and open the display assembly.
6. Lift up one corner of the Status/Internet Zone Cover 1.
7. Push forward from the back (center piece) to release the snaps on the Status/Internet Zone Cover 2.
8. Remove Status/Internet Zone Cover from the chassis.

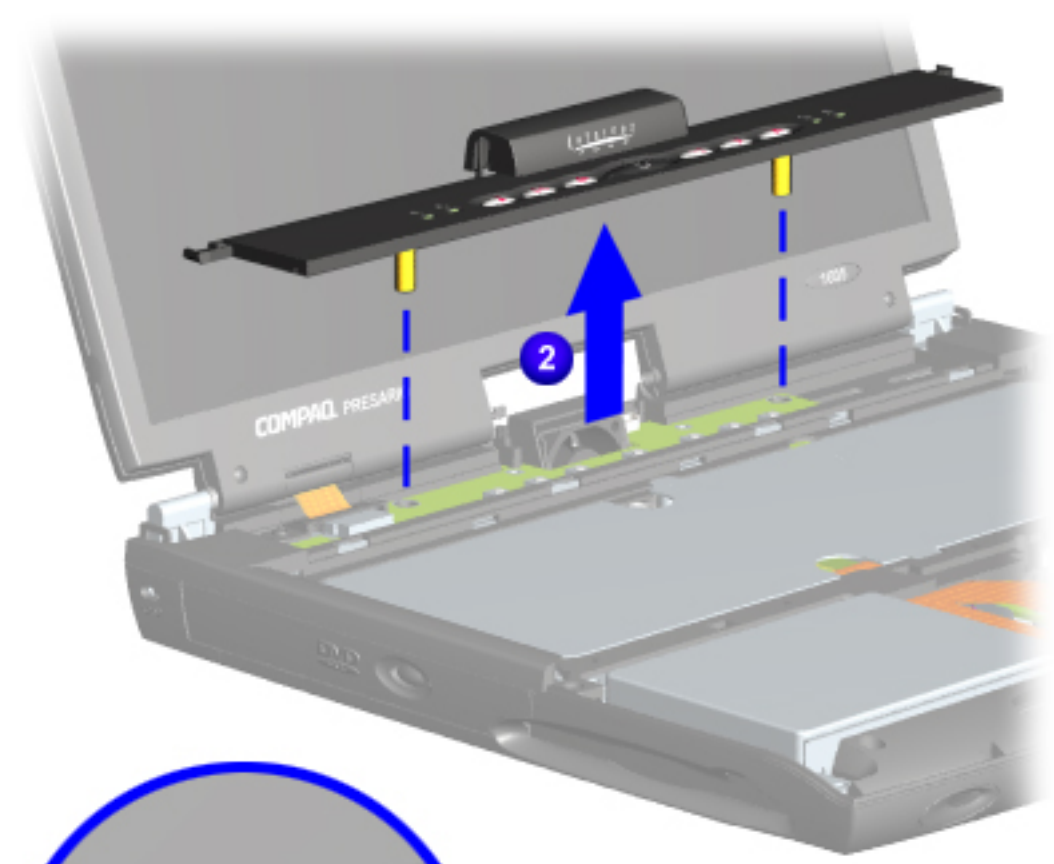

To replace the status panel assembly, reverse the previous procedures.

Previous Step

maintenance & service guide

Presario 1600 Series
Models: 1600T, 1600-XL140, 1600-XL141, 1600-XL142, 1600-XL143, 1600-XL144, 1600-XL145, 1600-XL146, 1600-XL147, and 1600-XL150

- Removal Sequence
- Electrostatic Discharge
- Service Considerations
- Cables and Connectors
- Preparing the Computer for Disassembly
- QuikDock
- Battery Pack
- Palmrest Cover with TouchPad
- Keyboard
- Status/Internet Zone Cover
- Internet Button Board
- Heatspreader
- Modem
- Hard Drive
- DisqPlay Module
- Processor
- CD or DVD Drive
- Display Panel Assembly
- Upper CPU Cover
- Fan Assembly
- RTC Battery
- Diskette Drive
- Battery Charger Board
- Speaker Assembly
- System Board
- Memory Module

Removal Sequence

Removing the Internet Button Board

NOTE:	Illustrations may show parts removed that are not part of this procedure. It is necessary to remove only the parts listed in the written procedure.

To remove the internet button board, complete the following steps:

1. Prepare the computer for disassembly.
2. Remove the Status/Internet Zone Cover.
3. Remove screw securing the display flex cable bracket and disconnect the display flex cable and backlight cable from the Internet Button Board.

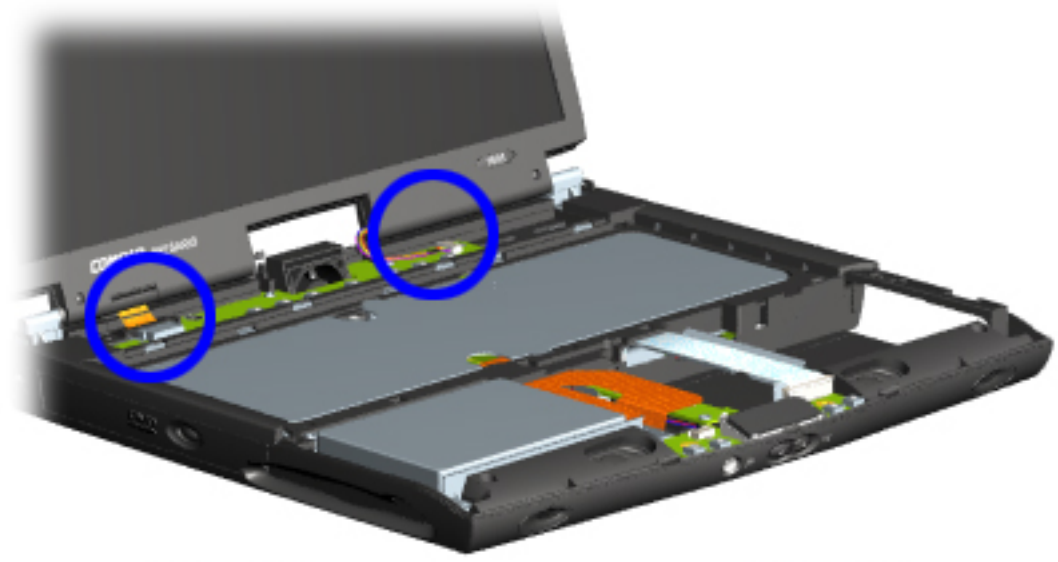

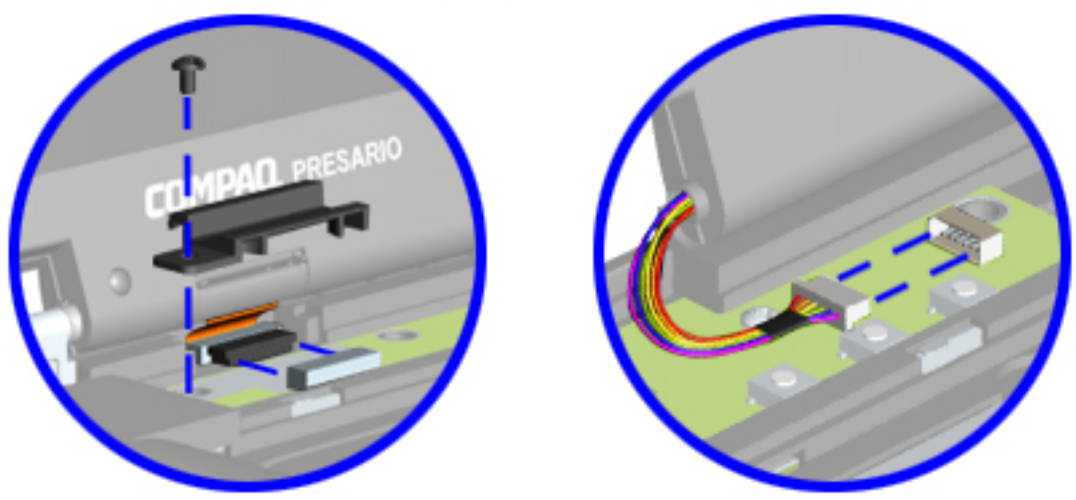

Next Step

- Removal Sequence
- Electrostatic Discharge
- Service Considerations
- Cables and Connectors
- Preparing the Computer for Disassembly
- QuikDock
- Battery Pack
- Palmrest Cover with TouchPad
- Keyboard
- Status Panel
- Internet Button Board
- Heatspreader
- Modem
- Hard Drive
- DisqPlay Module
- Processor
- CD or DVD Drive
- Display Panel Assembly
- Upper CPU Cover
- Fan Assembly
- RTC Battery
- Diskette Drive
- Voltage Converter Board
- Speaker Assembly
- System Board
- Memory Module

Removal Sequence

Removing the Internet Button Board, continued

To remove the internet button board, complete the following steps:

4. Remove two screws securing the Internet Button Board and remove from the chassis.

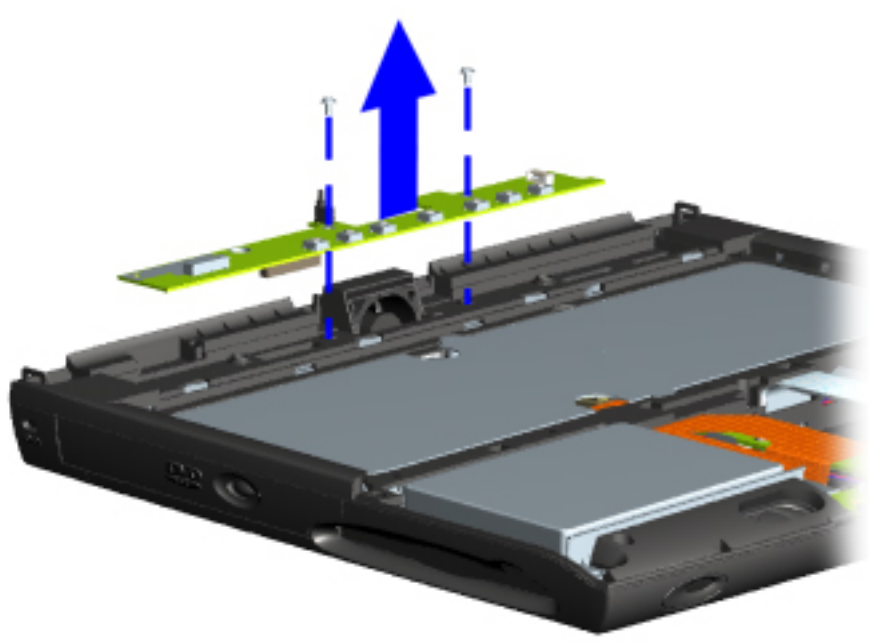

To replace the Internet Button Board, reverse the previous procedures.

Previous Step

- Removal Sequence
- Electrostatic Discharge
- Service Considerations
- Cables and Connectors
- Preparing the Computer for Disassembly
- QuikDock
- Battery Pack
- Palmrest Cover with TouchPad
- Keyboard
- Status/Internet Zone Cover
- Internet Button Board
- Heatspreader
- Modem
- Hard Drive
- DisqPlay Module
- Processor
- CD or DVD Drive
- Display Panel Assembly
- Upper CPU Cover
- Fan Assembly
- RTC Battery
- Diskette Drive
- Battery Charger Board
- Speaker Assembly
- System Board
- Memory Module

Removal Sequence

Removing the Heatspreader

To remove the Heatspreader, complete the following steps:

1. Prepare the computer for disassembly.
2. Remove the Palmrest Cover with TouchPad.
3. Remove the keyboard.
4. Remove three screws from the Heatspreader and lift out of the chassis.

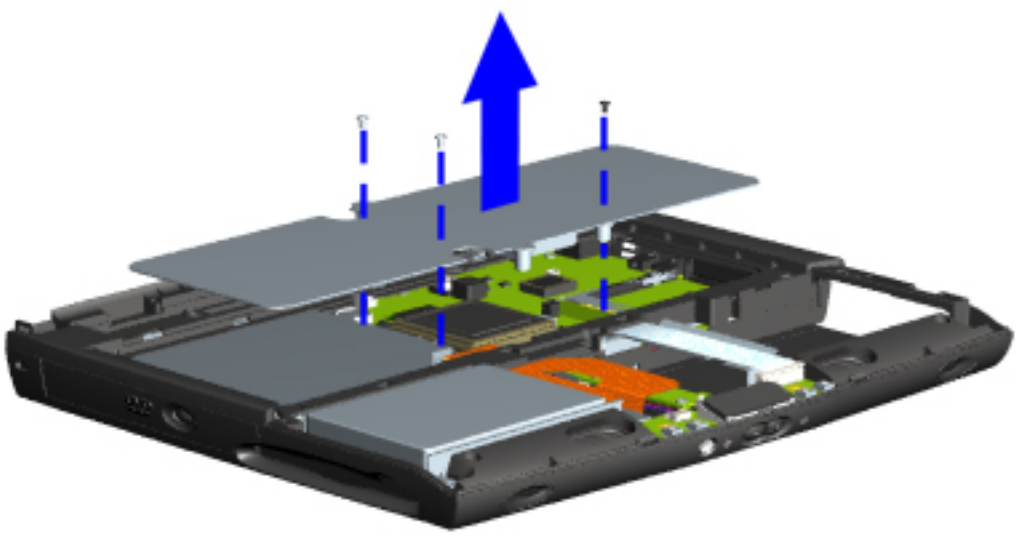

NOTE:	If the thermal pads on the Heatspreader are missing or damaged, a new Heatspreader should be installed.

To replace the Heatspreader, reverse the previous procedures.

IMPORTANT:	Before installing the new Heatspreader, remove the plastic covering from the thermal pads.

⚠	**WARNING:** To prevent damage, do not use excessive force when replacing the screws.

- Removal Sequence
- Electrostatic Discharge
- Service Considerations
- Cables and Connectors
- Preparing the Computer for Disassembly
- QuikDock
- Battery Pack
- Palmrest Cover with TouchPad
- Keyboard
- Status/Internet Zone Cover
- Internet Button Board
- Heatspreader
- Modem
- Hard Drive
- DisqPlay Module
- Processor
- CD or DVD Drive
- Display Panel Assembly
- Upper CPU Cover
- Fan Assembly
- RTC Battery
- Diskette Drive
- Battery Charger Board
- Speaker Assembly
- System Board
- Memory Module

Removal Sequence

Removing the Modem

To remove the modem, complete the following steps:

1. Prepare the computer for disassembly.
2. Turn computer showing bottom side upward.
3. Locate the modem door. (Modem door is located on the left side when computer is turned over with bottom side upward.)
4. Remove one screw from modem door.
5. Disconnect modem from the system board.

To replace the modem board, reverse the previous procedures.

- Removal Sequence
- Electrostatic Discharge
- Service Considerations
- Cables and Connectors
- Preparing the Computer for Disassembly
- QuikDock
- Battery Pack
- Palmrest Cover with TouchPad
- Keyboard
- Status/Internet Zone Cover
- Internet Button Board
- Heatspreader
- Modem
- Hard Drive
- DisqPlay Module
- Processor
- CD or DVD Drive
- Display Panel Assembly
- Upper CPU Cover
- Fan Assembly
- RTC Battery
- Diskette Drive
- Battery Charger Board
- Speaker Assembly
- System Board
- Memory Module

Removal Sequence

Removing the Hard Drive

NOTE:	Illustrations may show parts removed that are not part of this procedure. It is necessary to remove only the parts listed in the written procedure.

To remove the hard drive, complete the following steps:

1. Prepare the computer for disassembly.
2. Remove the Palmrest Cover with TouchPad.
3. Remove four screws from the hard drive mounting bracket, disconnect the hard drive data cable and lift out the hard drive with drive mounting brackets attached.

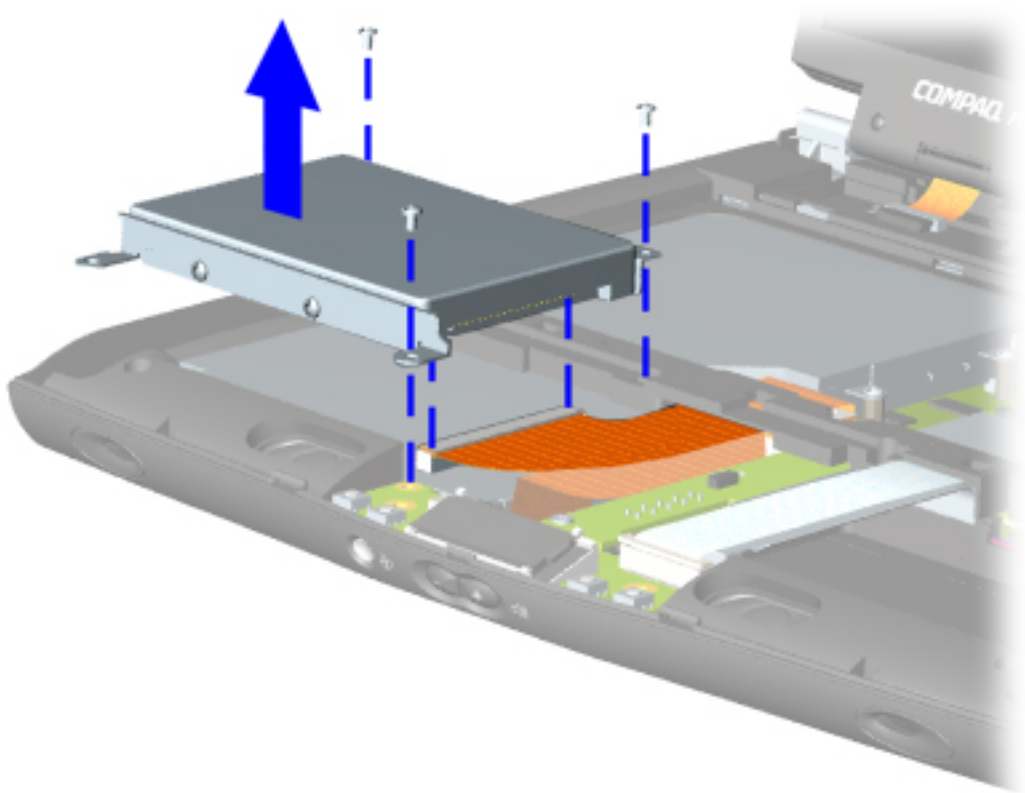

Next Step

Removal Sequence

Removing the Hard Drive Mounting Brackets

To remove the hard drive mounting brackets, remove two screws from each of side of the hard drive.

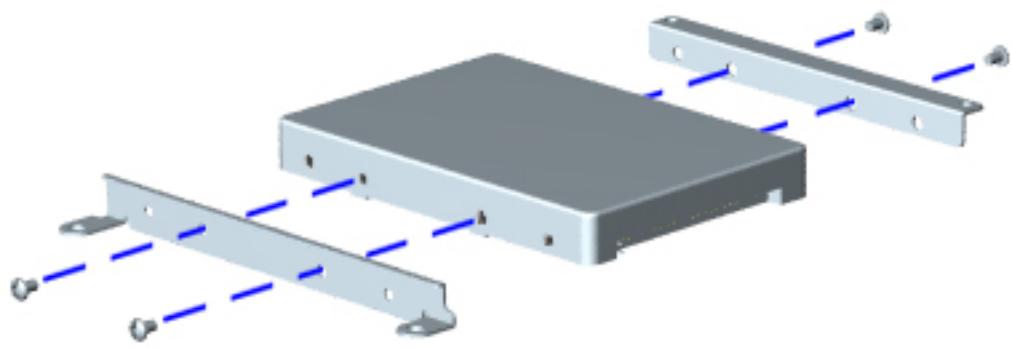

To replace the hard drive and mounting brackets, reverse the previous procedures.

Previous Step

Removal Sequence

Removing the DisqPlay Module

NOTE:	Illustrations may show parts removed that are not part of this procedure. It is necessary to remove only the parts listed in the written procedure.

To remove the DisqPlay Module, complete the following steps:

1. Prepare the computer for disassembly.
2. Remove the Palmrest Cover with TouchPad.
3. Remove the hard drive.
4. Lift up the DisqPlay Module, disconnect the flex cable from the DisqPlay Module, and remove the DisqPlay Module from the chassis.

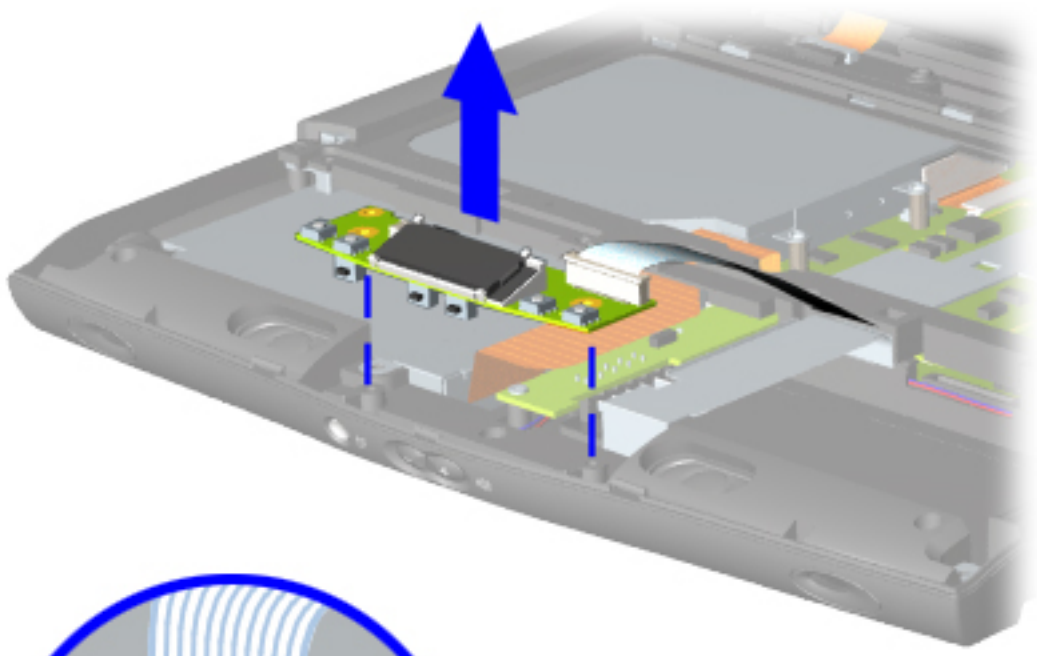

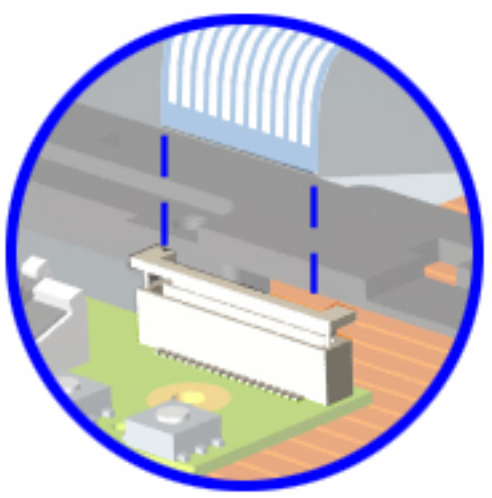

To replace the DisqPlay Module, reverse the previous procedures.

- Removal Sequence
- Electrostatic Discharge
- Service Considerations
- Cables and Connectors
- Preparing the Computer for Disassembly
- QuikDock
- Battery Pack
- Palmrest Cover with TouchPad
- Keyboard
- Status/Internet Zone Cover
- Internet Button Board
- Heatspreader
- Modem
- Hard Drive
- DisqPlay Module
- Processor
- CD or DVD Drive
- Display Panel Assembly
- Upper CPU Cover
- Fan Assembly
- RTC Battery
- Diskette Drive
- Battery Charger Board
- Speaker Assembly
- System Board
- Memory Module

Removal Sequence

Removing the Processor

To remove the processor, complete the following steps:

1. Prepare the computer for disassembly.
2. Remove the Palmrest Cover with TouchPad.
3. Remove the keyboard.
4. Remove the Heatspreader.
5. Place tip of standard screwdriver in the "Open" slot, shift it to the right, and lift processor from the chassis.

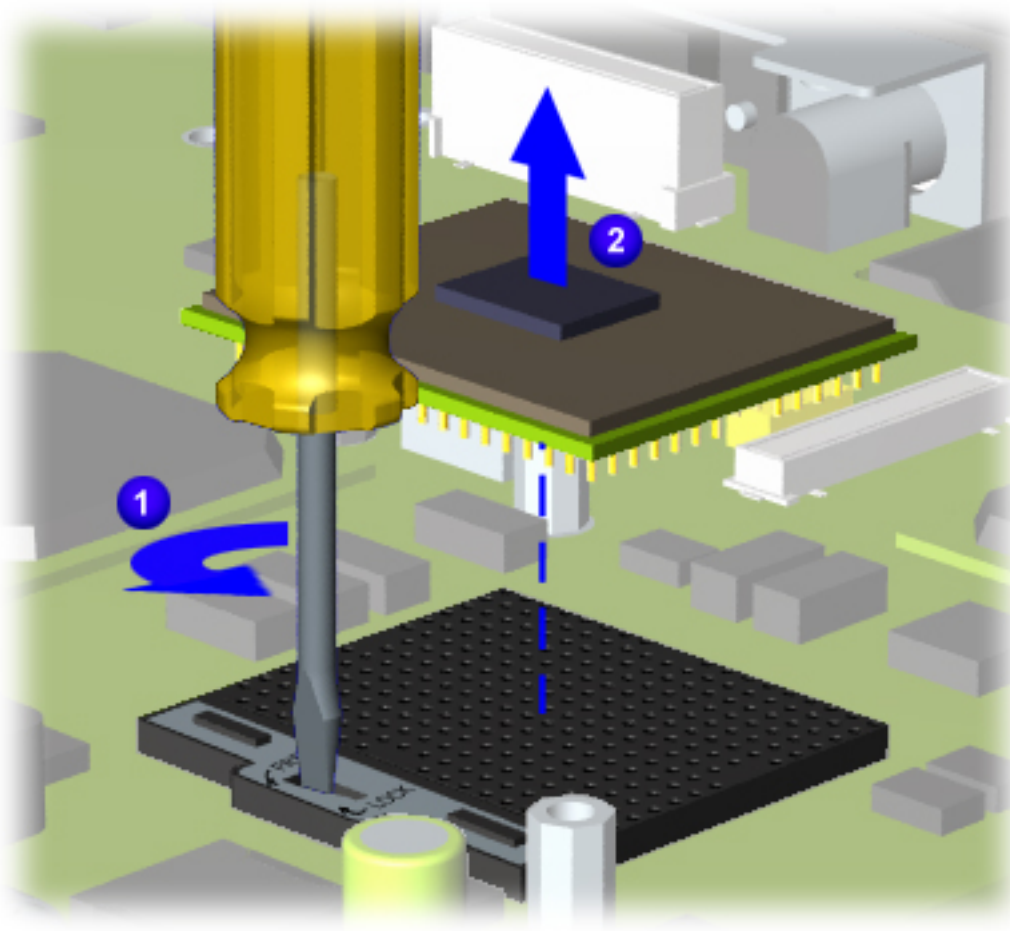

Next Step

- Removal Sequence
- Electrostatic Discharge
- Service Considerations
- Cables and Connectors
- Preparing the Computer for Disassembly
- QuikDock
- Battery Pack
- Palmrest Cover with TouchPad
- Keyboard
- Status Panel
- Internet Button Board
- Heatspreader
- Modem
- Hard Drive
- DisqPlay Module
- Processor
- CD or DVD Drive
- Display Panel Assembly
- Upper CPU Cover
- Fan Assembly
- RTC Battery
- Diskette Drive
- Voltage Converter Board
- Speaker Assembly
- System Board
- Memory Module

Removal Sequence

To replace the processor, perform the following:

1. Fully align the processor connector with the system board connector.
2. Press down carefully on the processor directly over the connectors to seat the processor.
3. Reverse the previous procedures.

Previous Step

- Removal Sequence
- Electrostatic Discharge
- Service Considerations
- Cables and Connectors
- Preparing the Computer for Disassembly
- QuikDock
- Battery Pack
- Palmrest Cover with TouchPad
- Keyboard
- Status/Internet Zone Cover
- Internet Button Board
- Heatspreader
- Modem
- Hard Drive
- DisqPlay Module
- Processor
- CD or DVD Drive
- Display Panel Assembly
- Upper CPU Cover
- Fan Assembly
- RTC Battery
- Diskette Drive
- Battery Charger Board
- Speaker Assembly
- System Board
- Memory Module

Removal Sequence

Removing the CD or DVD Drive

To remove the CD or DVD Drive, complete the following steps:

1. Prepare the computer for disassembly.
2. Remove the Palmrest Cover with TouchPad.
3. Remove the keyboard.
4. Remove the Heatspreader.
5. Turn the unit over and remove two screws from the base enclosure which secure the CD or DVD drive to the chassis.

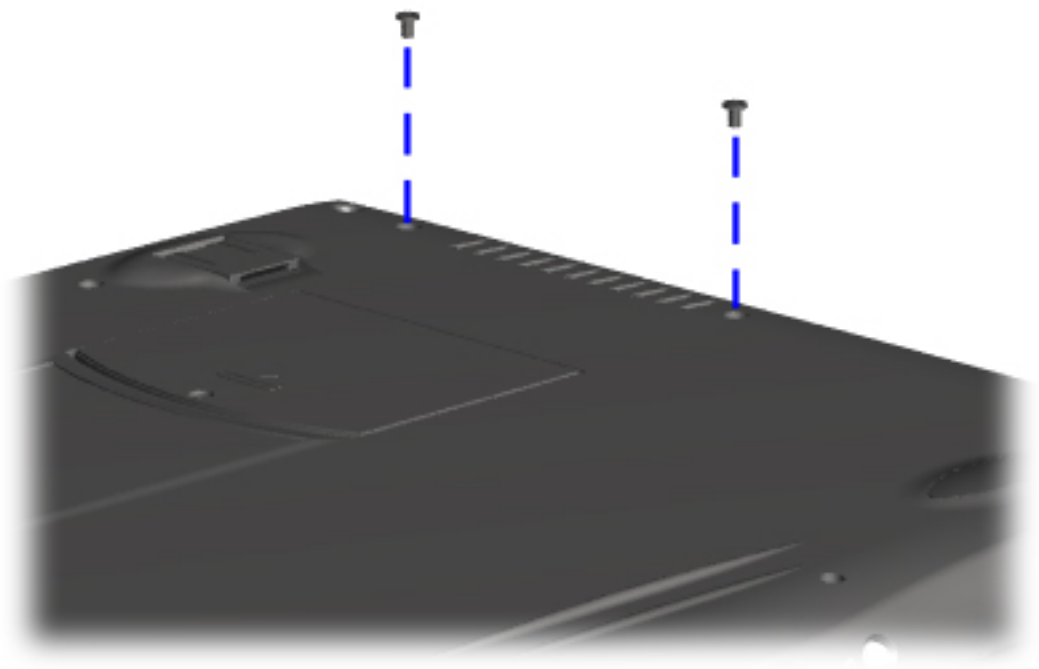

Next Step

Removal Sequence

Removing the CD or DVD Drive, continued

6. Disconnect the CD or DVD drive cable from the CD or DVD and push forward from the back of the drive to remove from the chassis.

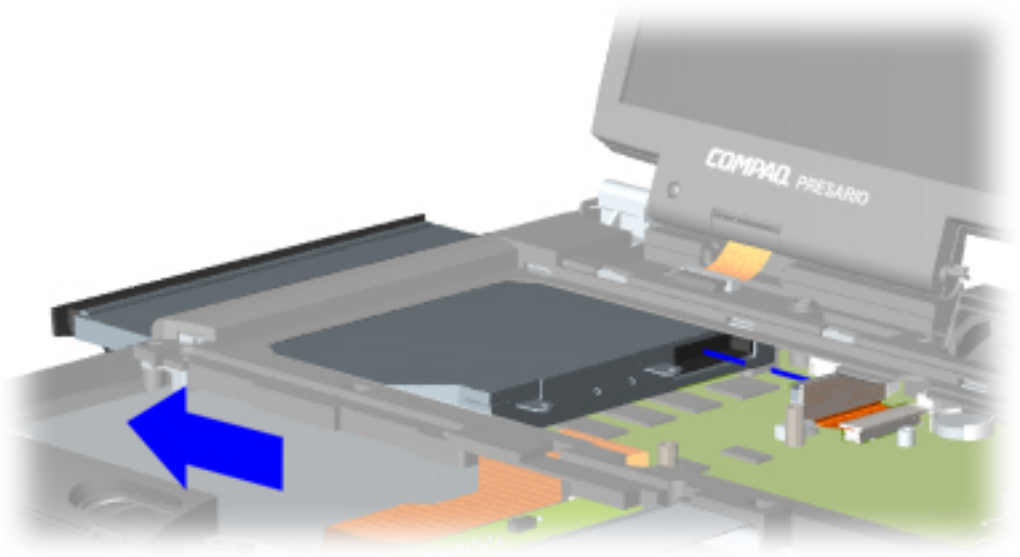

To replace the CD or DVD drive, reverse the previous procedures.

Previous Step

Removal Sequence

Removing the Display Panel Assembly

NOTE:	Illustrations may show parts removed that are not part of this procedure. It is necessary to remove only the parts listed in the written procedure.

To remove the display panel assembly, complete the following steps:

1. Prepare the computer for disassembly.
2. Remove the Status/Internet Zone Cover.
3. Remove screw securing the display flex cable bracket and disconnect the display flex cable and backlight cable from the Internet Button Board.

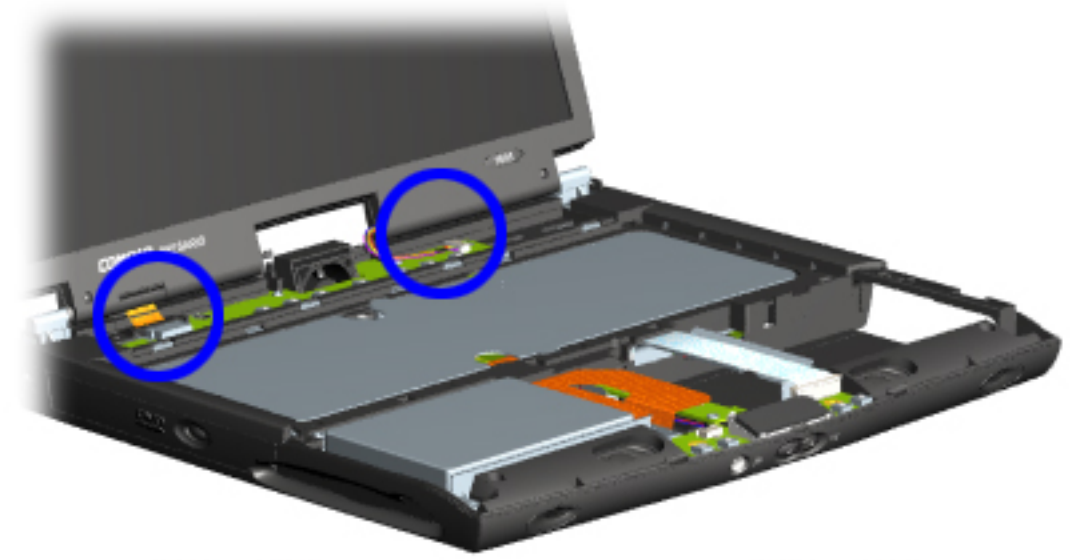

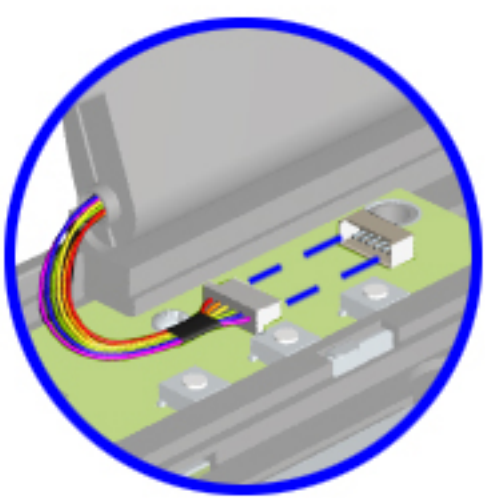

Next Step

- Removal Sequence
- Electrostatic Discharge
- Service Considerations
- Cables and Connectors
- Preparing the Computer for Disassembly
- QuikDock
- Battery Pack
- Palmrest Cover with TouchPad
- Keyboard
- Status Panel
- Internet Button Board
- Heatspreader
- Modem
- Hard Drive
- DisqPlay Module
- Processor
- CD or DVD Drive
- Display Panel Assembly
- Upper CPU Cover
- Fan Assembly
- RTC Battery
- Diskette Drive
- Voltage Converter Board
- Speaker Assembly
- System Board
- Memory Module

Removal Sequence

Removing the Display Panel Assembly, continued

4. Remove two outermost screws from the display base hinges.
5. Remove the display assembly from the chassis.

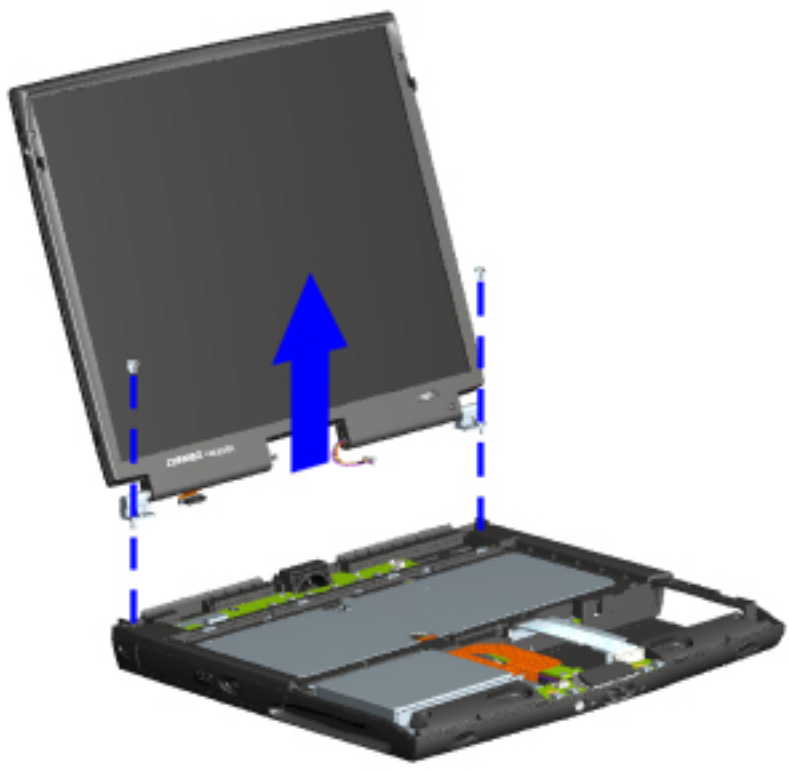

Previous Step

To replace the display assembly, reverse the previous steps.

- Removal Sequence
- Electrostatic Discharge
- Service Considerations
- Cables and Connectors
- Preparing the Computer for Disassembly
- QuikDock
- Battery Pack
- Palmrest Cover with TouchPad
- Keyboard
- Status/Internet Zone Cover
- Internet Button Board
- Heatspreader
- Modem
- Hard Drive
- DisqPlay Module
- Processor
- CD or DVD Drive
- Display Panel Assembly
- Upper CPU Cover
- Fan Assembly
- RTC Battery
- Diskette Drive
- Battery Charger Board
- Speaker Assembly
- System Board
- Memory Module

Removal Sequence

Removing the Upper CPU Cover

To remove the upper CPU cover, complete the following:

1. Prepare the computer for disassembly.
2. Remove the Palmrest Cover with TouchPad.
3. Remove the keyboard.
4. Remove the Heatspreader.
5. Remove the Status/Internet Zone Cover.
6. Remove the Internet Button board.
7. Remove the hard drive.
8. Remove the display panel assembly.
9. Remove four screws located on the top of the upper CPU cover and lift the cover off the chassis.

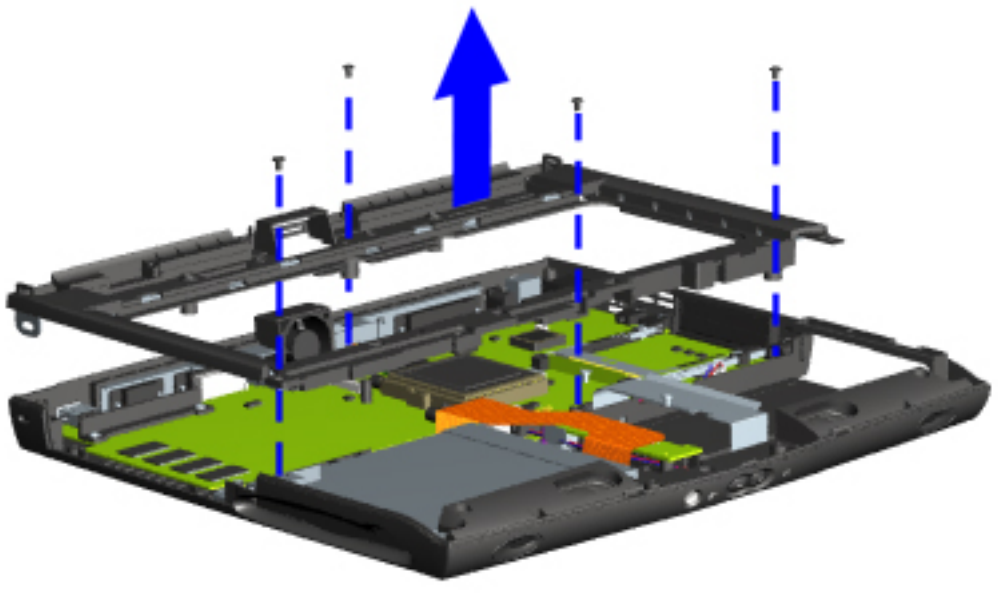

To replace the upper CPU cover, reverse the previous procedures.

- Removal Sequence
- Electrostatic Discharge
- Service Considerations
- Cables and Connectors
- Preparing the Computer for Disassembly
- QuikDock
- Battery Pack
- Palmrest Cover with TouchPad
- Keyboard
- Status/Internet Zone Cover
- Internet Button Board
- Heatspreader
- Modem
- Hard Drive
- DisqPlay Module
- Processor
- CD or DVD Drive
- Display Panel Assembly
- Upper CPU Cover
- Fan Assembly
- RTC Battery
- Diskette Drive
- Battery Charger Board
- Speaker Assembly
- System Board
- Memory Module

Removal Sequence

Removing the Fan Assembly

To remove the fan assembly, complete the following:

1. Prepare the computer for disassembly.
2. Remove the Palmrest Cover with TouchPad.
3. Remove the keyboard.
4. Remove the Heatspreader.
5. Remove the Status/Internet Zone Cover.
6. Remove the Internet Button board.
7. Remove the display panel assembly.
8. Remove the hard drive.
9. Remove the upper CPU cover.
10. Lift the fan assembly from the chassis slot and disconnect the fan cable from the connector on the system board. Fan faces inward, and arrow is not visible on the side of the fan.

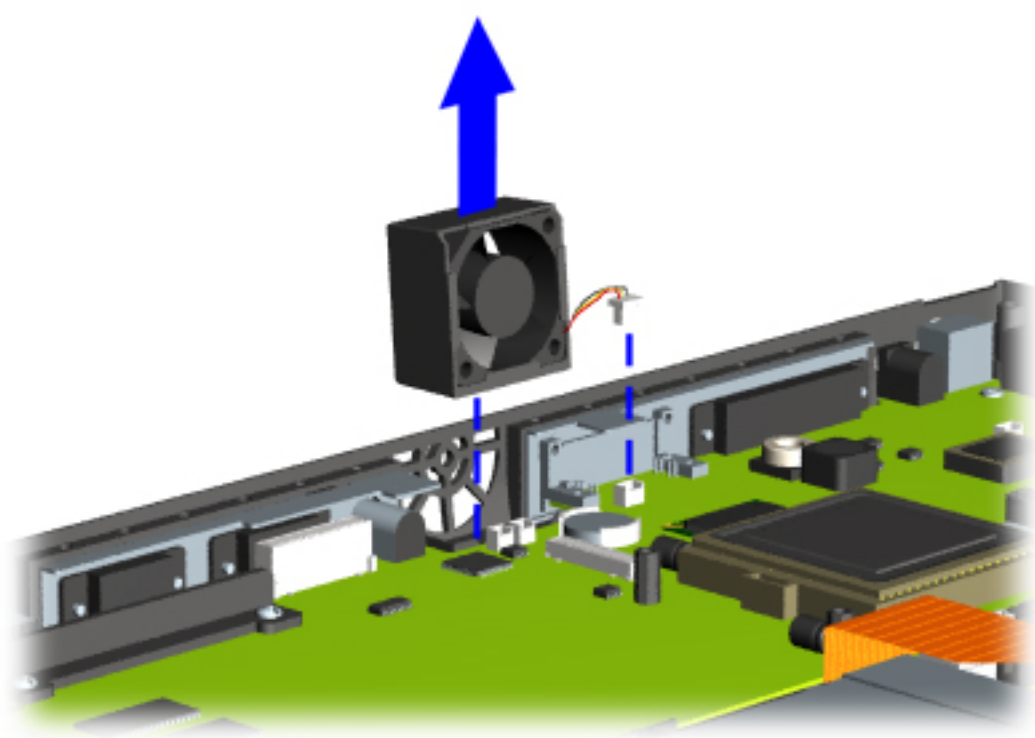

Next Step

- Removal Sequence
- Electrostatic Discharge
- Service Considerations
- Cables and Connectors
- Preparing the Computer for Disassembly
- QuikDock
- Battery Pack
- Palmrest Cover with TouchPad
- Keyboard
- Status Panel
- Internet Button Board
- Heatspreader
- Modem
- Hard Drive
- DisqPlay Module
- Processor
- CD or DVD Drive
- Display Panel Assembly
- Upper CPU Cover
- Fan Assembly
- RTC Battery
- Diskette Drive
- Voltage Converter Board
- Speaker Assembly
- System Board
- Memory Module

Removal Sequence

Removing the Fan Assembly, continued

To remove the fan gasket, pull the gasket from the fan.

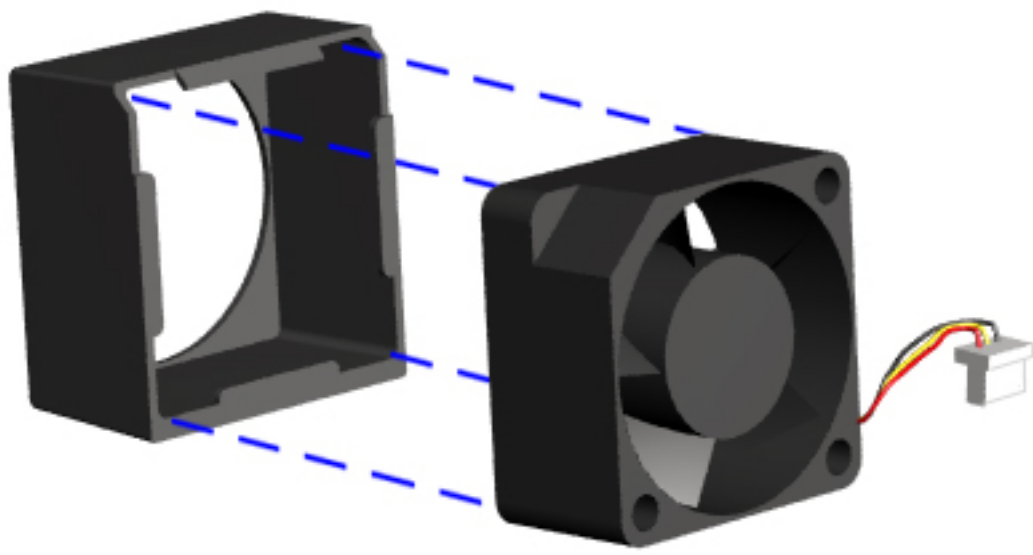

To replace the fan assembly and gasket, reverse the previous procedures.

IMPORTANT:	When replacing the fan assembly ensure the manufacturing label is pointing inward.

Previous Step

maintenance & service guide

Presario 1600 Series

Models: 1600T, 1600-XL140, 1600-XL141, 1600-XL142, 1600-XL143, 1600-XL144, 1600-XL145, 1600-XL146, 1600-XL147, and 1600-XL150

- Removal Sequence
- Electrostatic Discharge
- Service Considerations
- Cables and Connectors
- Preparing the Computer for Disassembly
- QuikDock
- Battery Pack
- Palmrest Cover with TouchPad
- Keyboard
- Status/Internet Zone Cover
- Internet Button Board
- Heatspreader
- Modem
- Hard Drive
- DisqPlay Module
- Processor
- CD or DVD Drive
- Display Panel Assembly
- Upper CPU Cover
- Fan Assembly
- RTC Battery
- Diskette Drive
- Battery Charger Board
- Speaker Assembly
- System Board
- Memory Module

Removal Sequence

Removing the Real Time Clock (RTC) Battery

CAUTION: Removing the RTC battery clears the power-on password and removes all setup attributes that are programmed in the CMOS.

To remove the RTC Battery, complete the following steps:

1. Prepare the computer for disassembly.
2. Remove the Palmrest Cover with TouchPad.
3. Remove the keyboard.
4. Remove the Heatspreader.
5. Remove the RTC battery from the battery socket, prying gently with a small flathead screwdriver. The RTC battery is located underneath the heatspreader next to the CD/DVD connector.

To replace the RTC battery, press the battery firmly into the socket and reverse the previous procedures to replace the remaining components.

- Removal Sequence
- Electrostatic Discharge
- Service Considerations
- Cables and Connectors
- Preparing the Computer for Disassembly
- QuikDock
- Battery Pack
- Palmrest Cover with TouchPad
- Keyboard
- Status/Internet Zone Cover
- Internet Button Board
- Heatspreader
- Modem
- Hard Drive
- DisqPlay Module
- Processor
- CD or DVD Drive
- Display Panel Assembly
- Upper CPU Cover
- Fan Assembly
- RTC Battery
- Diskette Drive
- Battery Charger Board
- Speaker Assembly
- System Board
- Memory Module

Removal Sequence

Removing the Diskette Drive

To remove the diskette drive, complete the following:

1. Prepare the computer for disassembly.
2. Remove the Palmrest Cover with TouchPad.
3. Remove the keyboard.
4. Remove the Heatspreader.
5. Remove the CD or DVD Drive.
6. Remove the Status/Internet Zone Cover.
7. Remove the Internet Button board.
8. Remove the display panel assembly.
9. Remove the hard drive.
10. Remove the upper CPU cover.
11. Remove the battery charger board.
12. Remove screw from the diskette drive retaining bracket.

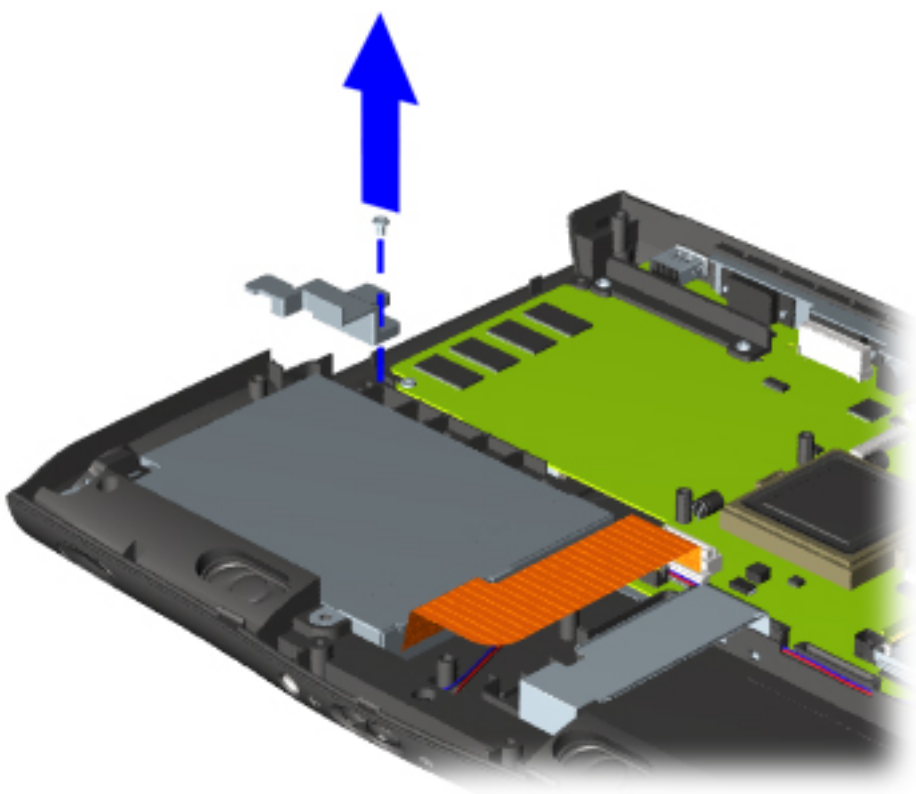

Next Step

Removal Sequence

Removing the Diskette Drive, continued

13. Remove the screw that connects the diskette drive bracket to the chassis.
14. Disconnect the diskette drive data cable from the ZIF connector on the system board and lift the diskette drive from the chassis.

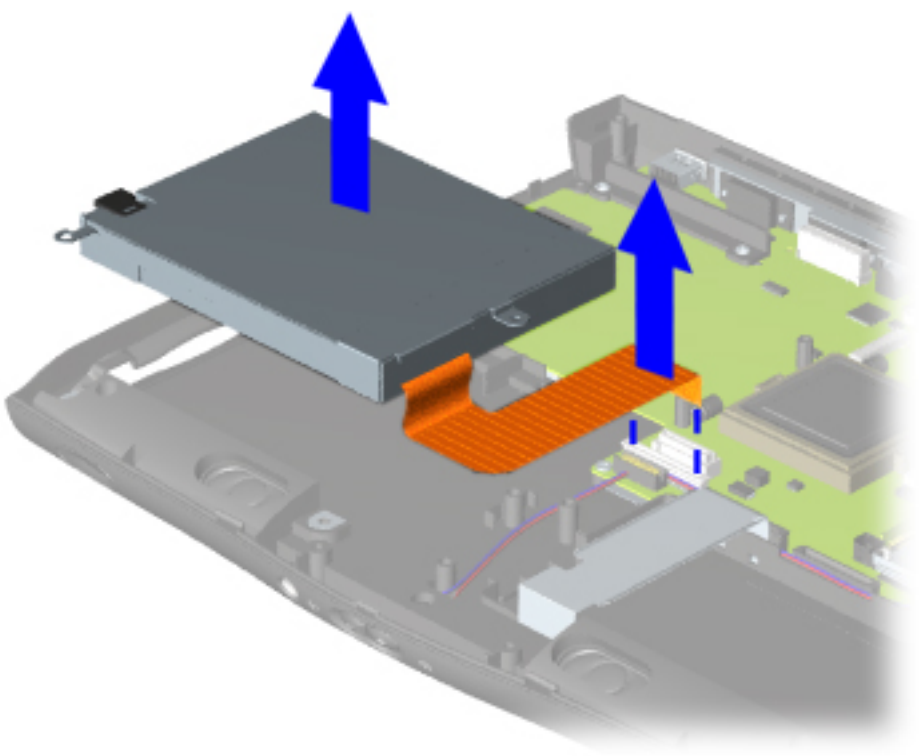

To replace the diskette drive, reverse the previous procedures.

CAUTION: Ensure that cables are placed in their proper location during the reassembly process.

Previous Step

- Removal Sequence
- Electrostatic Discharge
- Service Considerations
- Cables and Connectors
- Preparing the Computer for Disassembly
- QuikDock
- Battery Pack
- Palmrest Cover with TouchPad
- Keyboard
- Status/Internet Zone Cover
- Internet Button Board
- Heatspreader
- Modem
- Hard Drive
- DisqPlay Module
- Processor
- CD or DVD Drive
- Display Panel Assembly
- Upper CPU Cover
- Fan Assembly
- RTC Battery
- Diskette Drive
- Battery Charger Board
- Speaker Assembly
- System Board
- Memory Module

Removal Sequence

Removing the Battery Charger Board
(Voltage Converter Board)

To remove the battery charger board, complete the following:

1. Prepare the computer for disassembly.
2. Remove the Palmrest Cover with TouchPad.
3. Remove the keyboard.
4. Remove the Heatspreader.
5. Remove the Status/Internet Zone Cover.
6. Remove the Internet Button board.
7. Remove the display panel Assembly.
8. Remove the hard drive.
9. Remove the upper CPU cover.
10. Remove two screws from the battery charger board, unplug the board from the connector on the system board, and lift battery charger board out of the chassis.

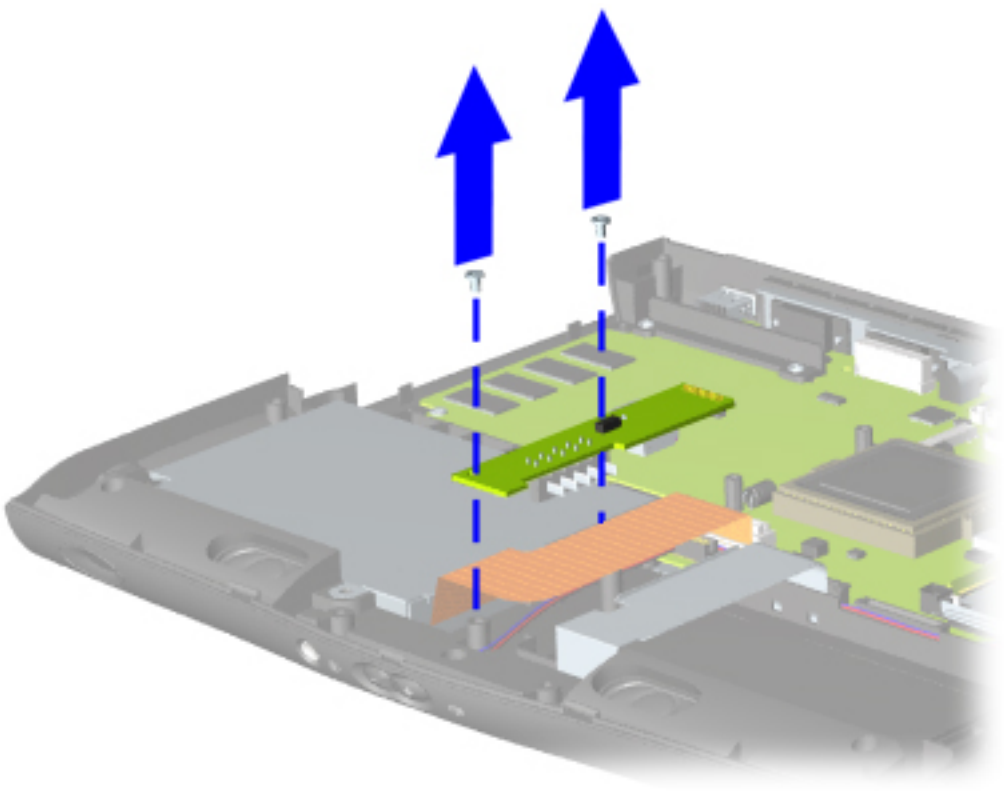

To replace the battery charger board, reverse the previous procedures.

NOTE:	When replacing the battery charger board, ensure that the pins are aligned with the connector on the system board.

- Removal Sequence
- Electrostatic Discharge
- Service Considerations
- Cables and Connectors
- Preparing the Computer for Disassembly
- QuikDock
- Battery Pack
- Palmrest Cover with TouchPad
- Keyboard
- Status/Internet Zone Cover
- Internet Button Board
- Heatspreader
- Modem
- Hard Drive
- DisqPlay Module
- Processor
- CD or DVD Drive
- Display Panel Assembly
- Upper CPU Cover
- Fan Assembly
- RTC Battery
- Diskette Drive
- Battery Charger Board
- Speaker Assembly
- System Board
- Memory Module

Removal Sequence

Removing the Speaker Assembly

To remove the speaker assembly, complete the following:

1. Prepare the computer for disassembly.
2. Remove the Palmrest Cover with TouchPad.
3. Remove the keyboard.
4. Remove the display panel assembly.
5. Remove the Status/Internet Zone Cover.
6. Remove the Internet Button board.
7. Remove the Heatspreader.
8. Remove the upper CPU cover.
9. Remove the hard drive.
10. Remove the battery charger board.
11. Disconnect the speaker cables from the system board and lift the speaker assembly from the chassis.

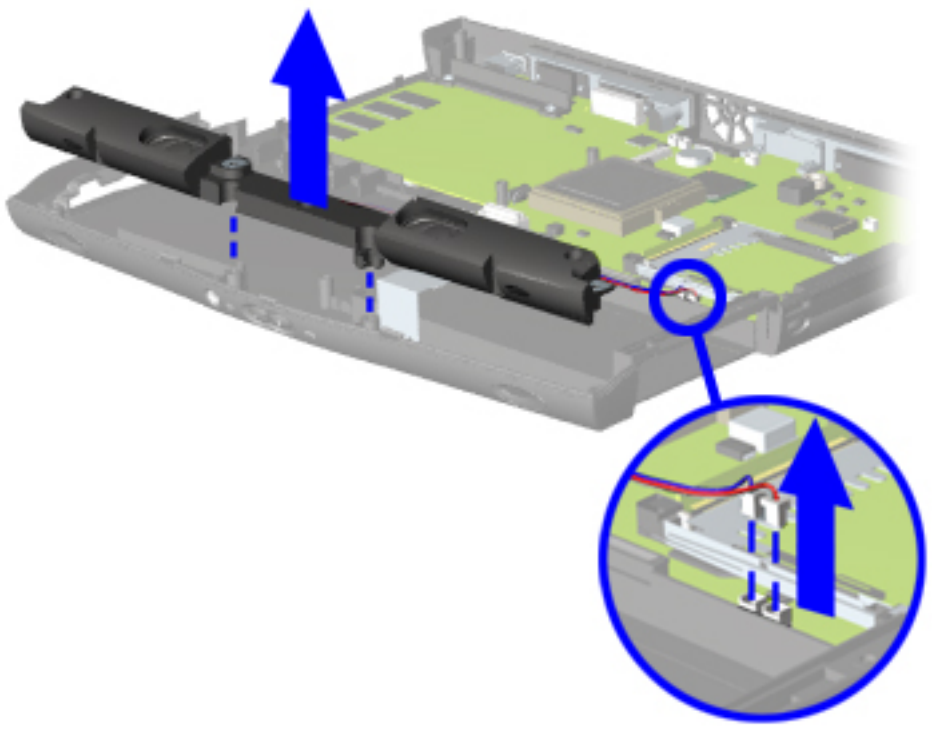

CAUTION: Ensure that cables are placed in their proper location during the reassembly process. See Cables and Connectors for illustrations.

To replace the speaker assembly, reverse the previous procedures.

maintenance & service guide

Presario 1600 Series
Models: 1600T, 1600-XL140, 1600-XL141, 1600-XL142, 1600-XL143, 1600-XL144, 1600-XL145, 1600-XL146, 1600-XL147, and 1600-XL150

- Removal Sequence
- Electrostatic Discharge
- Service Considerations
- Cables and Connectors
- Preparing the Computer for Disassembly
- QuikDock
- Battery Pack
- Palmrest Cover with TouchPad
- Keyboard
- Status/Internet Zone Cover
- Internet Button Board
- Heatspreader
- Modem
- Hard Drive
- DisqPlay Module
- Processor
- CD or DVD Drive
- Display Panel Assembly
- Upper CPU Cover
- Fan Assembly
- RTC Battery
- Diskette Drive
- Battery Charger Board
- Speaker Assembly
- System Board
- Memory Module

Removal Sequence

Removing the System Board

To remove the system board, complete the following steps:

1. Prepare the computer for disassembly.
2. Remove the Palmrest Cover with TouchPad.
3. Remove the keyboard.
4. Remove the display panel assembly.
5. Remove the Status/Internet Zone Cover.
6. Remove the Internet button board.
7. Remove the Heatspreader.
8. Disconnect the DisqPlay Module cable from the system board.
9. Remove the processor
10. Remove the CD or DVD drive.
11. Remove the upper CPU cover.
12. Remove the hard drive.
13. Remove the fan assembly.
14. Remove the battery charger board.
15. Disconnect the diskette drive cable from the system board.
16. Disconnect the speaker assembly cables from the system board.

Next Step

- Removal Sequence
- Electrostatic Discharge
- Service Considerations
- Cables and Connectors
- Preparing the Computer for Disassembly
- QuikDock
- Battery Pack
- Palmrest Cover with TouchPad
- Keyboard
- Status Panel
- Internet Button Board
- Heatspreader
- Modem
- Hard Drive
- DisqPlay Module
- Processor
- CD or DVD Drive
- Display Panel Assembly
- Upper CPU Cover
- Fan Assembly
- RTC Battery
- Diskette Drive
- Voltage Converter Board
- Speaker Assembly
- System Board
- Memory Module

Removal Sequence

Removing the System Board, continued

17. Remove two standoffs from the system board.

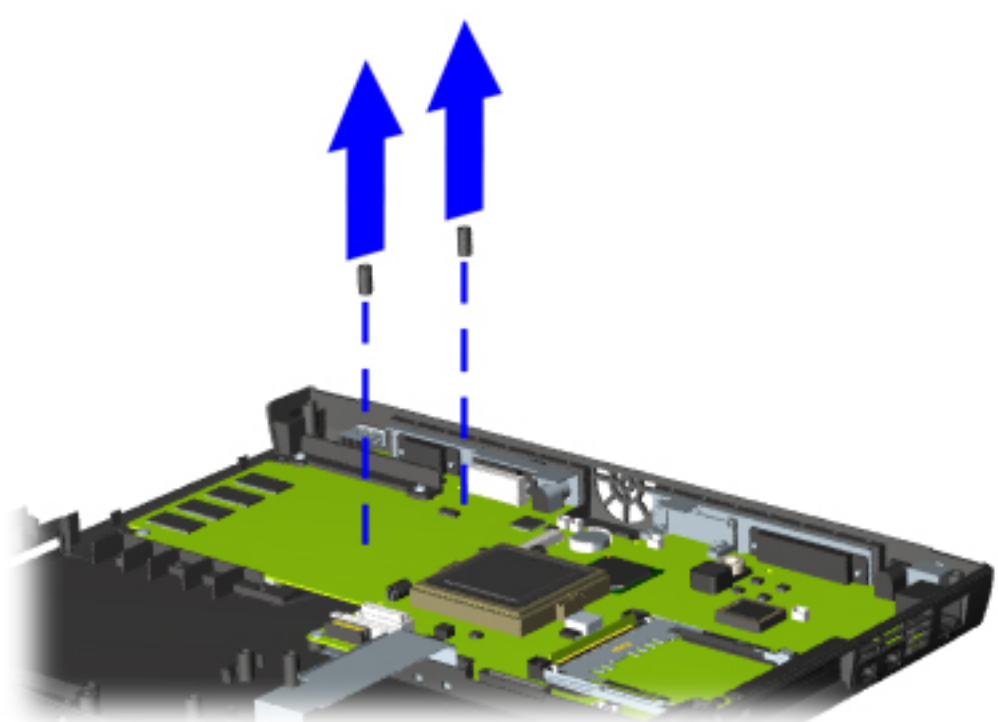

Previous Step

Next Step

- Removal Sequence
- Electrostatic Discharge
- Service Considerations
- Cables and Connectors
- Preparing the Computer for Disassembly
- QuikDock
- Battery Pack
- Palmrest Cover with TouchPad
- Keyboard
- Status Panel
- Internet Button Board
- Heatspreader
- Modem
- Hard Drive
- DisqPlay Module
- Processor
- CD or DVD Drive
- Display Panel Assembly
- Upper CPU Cover
- Fan Assembly
- RTC Battery
- Diskette Drive
- Voltage Converter Board
- Speaker Assembly
- System Board
- Memory Module

Removal Sequence

Removing the System Board, continued

18. Remove two screws from the CD or DVD drive mounting rail and lift the mounting rail from the system board.

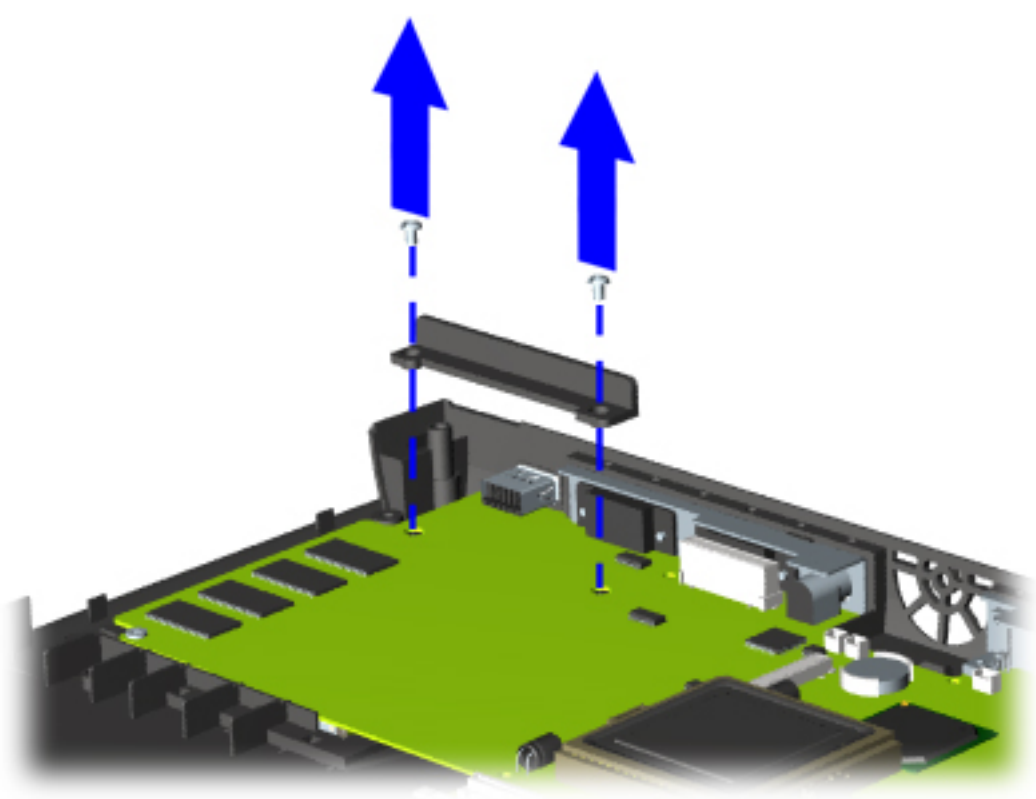

Previous Step

Next Step

- Removal Sequence
- Electrostatic Discharge
- Service Considerations
- Cables and Connectors
- Preparing the Computer for Disassembly
- QuikDock
- Battery Pack
- Palmrest Cover with TouchPad
- Keyboard
- Status Panel
- Internet Button Board
- Heatspreader
- Modem
- Hard Drive
- DisqPlay Module
- Processor
- CD or DVD Drive
- Display Panel Assembly
- Upper CPU Cover
- Fan Assembly
- RTC Battery
- Diskette Drive
- Voltage Converter Board
- Speaker Assembly
- System Board
- Memory Module

Removal Sequence

Removing the System Board, continued

19. Remove four screws from the system board.

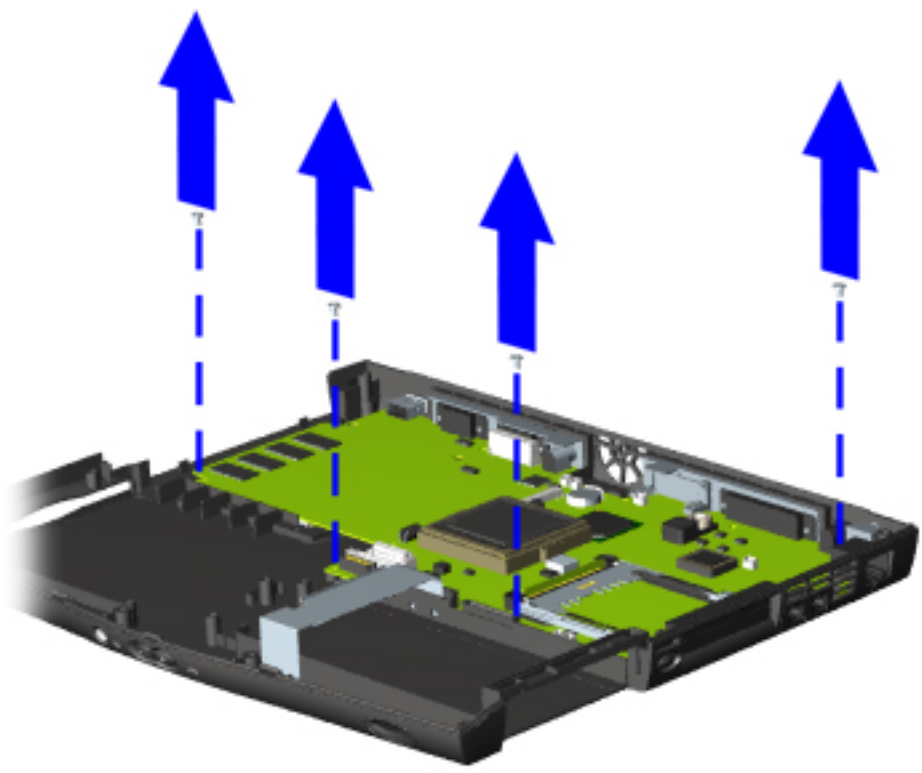

Previous Step

Next Step

Removal Sequence

Removing the System Board, continued

20. Shift the board to the left and lift up then pull out to remove from the chassis.

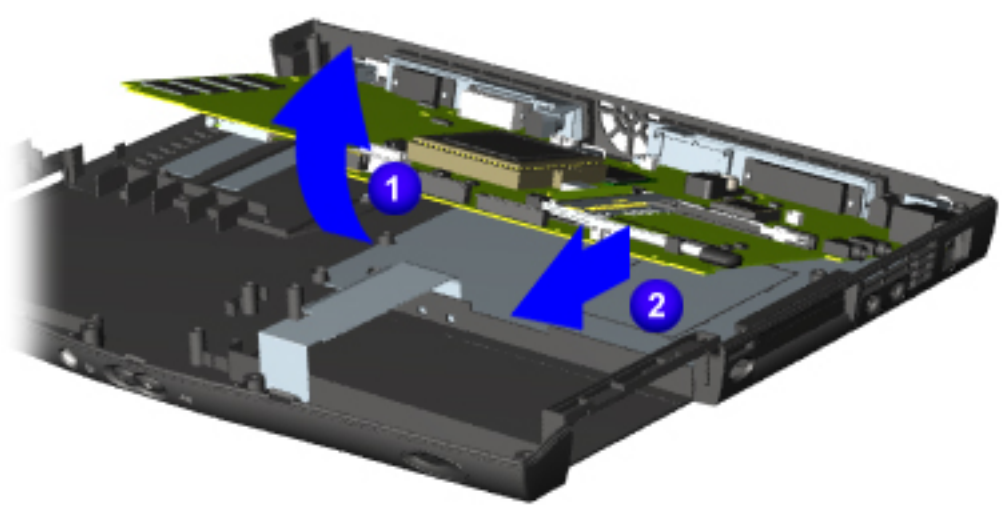

IMPORTANT: Before replacing the system board, remove all remaining cables.

To replace the system board, reverse the previous procedures.

Previous Step

- Removal Sequence
- Electrostatic Discharge
- Service Considerations
- Cables and Connectors
- Preparing the Computer for Disassembly
- QuikDock
- Battery Pack
- Palmrest Cover with TouchPad
- Keyboard
- Status/Internet Zone Cover
- Internet Button Board
- Heatspreader
- Modem
- Hard Drive
- DisqPlay Module
- Processor
- CD or DVD Drive
- Display Panel Assembly
- Upper CPU Cover
- Fan Assembly
- RTC Battery
- Diskette Drive
- Battery Charger Board
- Speaker Assembly
- System Board
- Memory Module

Removal Sequence

Removing the Memory Module

To remove the memory module, complete the following:

1. Prepare the computer for disassembly.
2. Close the computer and turn it upside down.
3. Remove the screw from the memory module door.
4. With the front of the computer facing you, slide the memory module door to the left and lift.

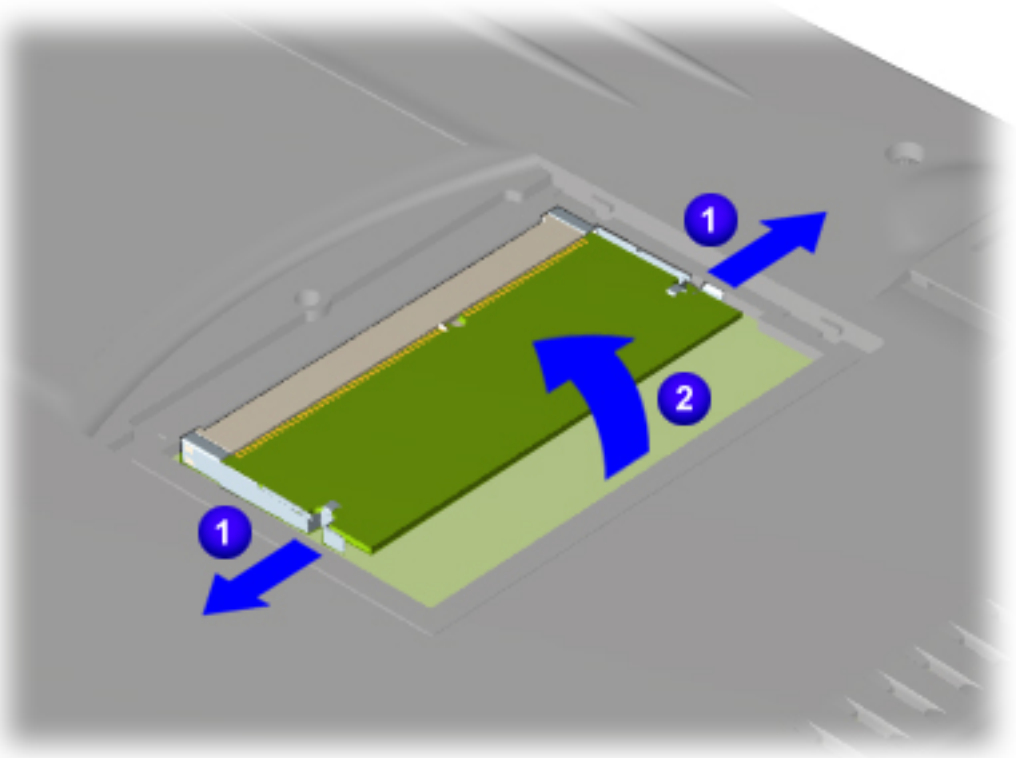

Next Step

- Removal Sequence
- Electrostatic Discharge
- Service Considerations
- Cables and Connectors
- Preparing the Computer for Disassembly
- QuikDock
- Battery Pack
- Palmrest Cover with TouchPad
- Keyboard
- Status/Internet Zone Cover
- Internet Button Board
- Heatspreader
- Modem
- Hard Drive
- DisqPlay Module
- Processor
- CD or DVD Drive
- Display Panel Assembly
- Upper CPU Cover
- Fan Assembly
- RTC Battery
- Diskette Drive
- Battery Charger Board
- Speaker Assembly
- System Board
- Memory Module

Removal Sequence

Removing the Memory Module, continued

5. Pull side levers to release the memory module and unplug the memory module from the system board.

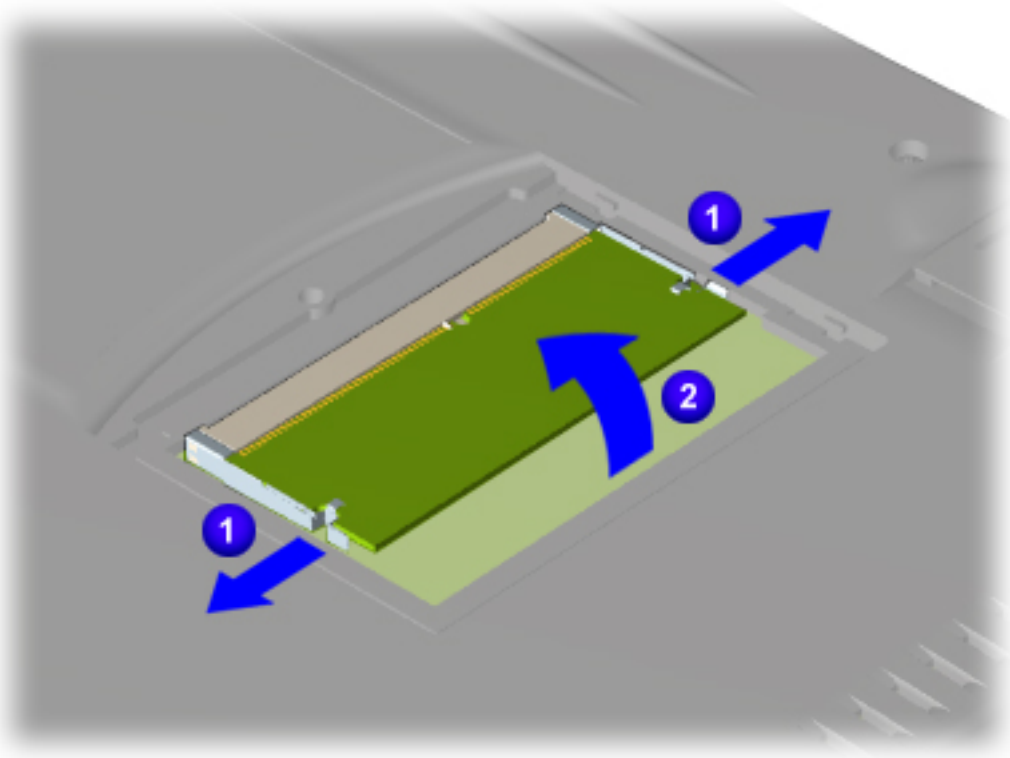

To replace the memory module, reverse the previous procedures.

Previous Step

- Preliminary Steps
- Clearing the Power-On Password
- Power-On Self Test (POST)
- Compaq Diagnostics
- Diagnostic Error Codes
- Troubleshooting Without Diagnostics
- Solving Minor Problems
- Contacting Compaq Support

Troubleshooting

Preliminary Steps

Before running POST, complete the following preliminary steps:

1. If a power-on password has been established, type the password and press the Enter key. If the password is not known, clear the password.
2. Run Computer Checkup.
3. Turn off the computer and its external devices.
4. Disconnect any external devices that you do not want to test. Do not disconnect the printer if you want to test it or use it to log error messages.

IMPORTANT:	If the problem only occurs when an external device is connected to the computer, the problem may be related to the external device or its cable. Verify this by running POST with and without the external device connected.

5. Install loopback plugs in the serial and parallel connectors if you would like to test these ports.
6. Ensure the hard drive is installed in the computer.
7. Ensure that the battery pack is inserted in the computer and the computer is connected to an external AC power source.

When the preliminary steps are completed, you are ready to run POST.

- Preliminary Steps
- Clearing the Power-On Password
- Power-On Self Test (POST)
- Compaq Diagnostics
- Diagnostic Error Codes
- Troubleshooting Without Diagnostics
- Solving Minor Problems
- Contacting Compaq Support

Troubleshooting

Clearing the Power-On Password

NOTE:	Clearing the power-on password also removes all Setup attributes that are programmed in the CMOS.

If the password is not known, clear it by performing the following steps:

1. Turn off the computer.
2. Disconnect the power cord.
3. Remove the battery pack.
4. Remove the Palmrest Cover with TouchPad.
5. Remove the keyboard.
6. Remove the Heatspreader.

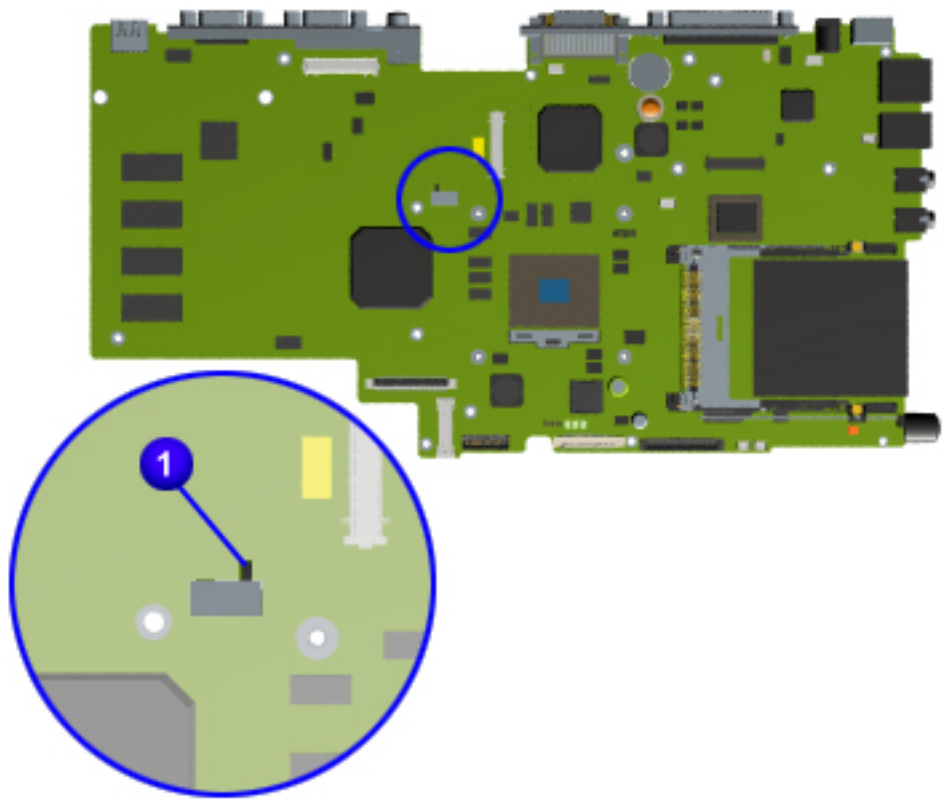

7. Remove the RTC battery for about 30 seconds to ensure that the password is cleared. (The RTC battery is located underneath the heatspreader and next to the CD/DVD connector.) Not shown in illustration.
8. Reassemble the computer.
9. Turn on the computer to verify that the power-on password has been cleared. If it has not been cleared, repeat steps 1 through 9.

- Preliminary Steps
- Clearing the Power-On Password
- Power-On Self Test (POST)
- Compaq Diagnostics
- Diagnostic Error Codes
- Troubleshooting Without Diagnostics
- Solving Minor Problems
- Contacting Compaq Support

Troubleshooting

Power-On Self Test (POST)

To run POST, complete these steps:

Turn off the computer, then turn on the computer. As soon as the Compaq logo appears press the **ESC** key to clear the logo and display the POST messages as they occur.

If POST does not detect any errors, the computer will not beep. This indicates successful completion of the POST test. POST has run successfully and boots from the hard drive (or from a bootable diskette if one is installed in the diskette drive).

If POST detects errors, the errors are indicated by screen and/or audible messages. A list of the POST error codes and their descriptions are shown in the table below.

NOTE:	If the system is not functioning well enough to run POST, or if the display is not functioning well enough to show POST error messages, refer to the Troubleshooting tables.

Power-On Self-Test Messages	
102-System Board Failure	
Probable Cause	**Recommended Action**
DMA, timers, etc.	Replace the system board.
162-System Options Not Set	
Probable Cause	**Recommended Action**
Configuration incorrect	Run Computer Setup.
CMOS reflects that an invalid configuration has been set.	Run Computer Setup.
RAM failure	1. Replace the memory modules. 2. Replace the system board.
Memory test data error	1. Replace the memory modules. 2. Replace the system board.
XX000YZZ RAM failure	Replace the system board.
XX000YZZ 201-Memory Error	
Probable Cause	**Recommended Action**
	1. Replace the memory modules. 2. Replace the system board.
301-Keyboard Error	
Probable Cause	**Recommended Action**
Keyboard failure	1. Ensure the keys are not depressed during POST. 2. Reconnect the keyboard with the computer off. 3. Replace the keyboard.
304-Keyboard or System Unit Error	
Probable Cause	**Recommended Action**
Keyboard or system board error	1. Replace the keyboard. 2. Replace the TouchPad or mouse. 3. Replace the system board.
601-Diskette Controller Error	
Probable Cause	**Recommended Action**
Mismatch in drive type or failure in the diskette controller	1. Run Computer Checkup (TEST). 2. Check and/or replace cables. 3. Replace the system board.
605-Diskette Drive Error	
Probable Cause	**Recommended Action**
Mismatch in drive type	Run Computer Setup.
1780-Primary Hard Drive 0 Failure	
Probable Cause	**Recommended Action**
Disk 0 failed to respond	1. Run Computer Checkup (TEST). 2. Replace the hard drive.
Hard drive format error	1. Run Computer Checkup (TEST). 2. Replace the hard drive.
1782-Hard Drive Controller	
Probable Cause	**Recommended Action**
Hard drive controller failure	1. Run Computer Setup. 2. Replace the hard drive.

Top of Page

- Preliminary Steps
- Clearing the Power-On Password
- Power-On Self Test (POST)
- Compaq Diagnostics
- Diagnostic Error Codes
- Troubleshooting Without Diagnostics
- Solving Minor Problems
- Contacting Compaq Support

Troubleshooting

Compaq Diagnostics

Compaq Diagnostics are installed on the hard drive of the computer. Run the Diagnostic utilities when you want to view or test system information and if you have installed or connected devices. If you run Compaq Diagnostics from a diskette, ensure that it is version 10.11 or later.

The Diagnostics menu includes the following utilities:

- Computer Checkup (TEST)
- View System Information (INSPECT)
- Prepare Computer for a Compaq Service Call (RemotePaq)

If you have a problem you cannot solve, run the Diagnostics utilities before you call for support. Run Computer Checkup and select to save the device list to a file and to print or to save the log of errors. Run the View System Information (INSPECT) utility and select to print or to save that information. Have the files or the printed information available when you call for support.

Computer Checkup (TEST)

Computer Checkup (TEST) determines whether the various computer components and devices are recognized by the system and are functioning properly. You can display, print, or save the information generated by Computer Checkup.

Follow these steps to run Computer Checkup:

1. Plug the computer into an external power source. (A low battery condition could interrupt the program.)
2. Turn on the external devices that you want to test. Connect the printer if you want to print a log of error messages.
3. Insert the Compaq Diagnostics diskette in drive A.
4. Turn on or restart the computer. The computer starts from drive A, and the Diagnostics Welcome screen appears.
5. Press Enter to continue. The Diagnostics menu appears.
6. Select Computer Checkup from the Diagnostics menu. A Test Option menu appears.
7. Select View the Device List from the Test Option menu. A list of the installed Compaq devices appears.
8. If the list of installed devices is correct, select OK. The Test Option menu appears.

NOTE:	If the list is incorrect, ensure that any new devices are installed properly.

9. Select one of the following from the Test Option menu:
   - Quick Check Diagnostics. Runs a quick, general test on each device with a minimal number of prompts. If errors occur, they display when the testing is complete. You cannot print or save the error messages.
   - Automatic Diagnostics. Runs unattended, maximum testing of each device with minimal prompts. You can choose how many times to run the tests, to stop on errors, or to print or save a log of errors.
   - Prompted Diagnostics. Allows maximum control over testing the devices. You can choose attended or unattended testing, decide to stop on errors, or choose to print or save a log of errors.
10. Follow the instructions on the screen as the devices are tested. When testing is complete, the Test Option menu appears.
11. Exit the Test Option menu.
12. Exit the Diagnostics menu.

View System Information (INSPECT)

The View System Information (INSPECT) utility provides information about the computer and installed or connected devices. You can display, print, or save the information.

Follow these steps to run View System Information (INSPECT) from the Compaq Diagnostics diskette:

1. Turn on the external devices that you want to test. Connect the printer if you want to print the information.
2. Insert the Compaq Diagnostics diskette in drive A.
3. Turn on or restart the computer. The computer starts from drive A, and the Diagnostics Welcome screen appears.
4. Press Enter to continue. The Diagnostics menu appears.
5. Select View System Information (INSPECT) from the Diagnostics menu.
6. Select the item you want to view from the following list:

System	Memory
ROM	Audio
Keyboard	Operating system
System ports	System files
System storage	Windows files
Graphics	

7. Follow the instructions on the screen to cycle through the screens, to return to the list and choose another item, or to print the information.

Top of Page

Troubleshooting

Contacting Compaq Support

Obtain the following information before contacting Compaq Reseller Support:

- Product name
- Product serial number
- Purchase date
- Conditions under which the problem occurred
- Any error messages that have occurred
- Hardware configuration
- Type of printer connected
- Hardware/software being used
- Printed result of Computer Checkup (TEST)
- Printed copies of *CONFIG.SYS* and *AUTOEXEC.BAT* files, if possible

Shipping Preparation

To ship the computer, complete the following steps:

1. Back up the critical hard drive files. Ensure that backup tapes/diskette are not exposed to electrical or magnetic fields while stored in transit.
2. Turn off the computer and external devices.
3. Disconnect the external devices from their power sources, then from the computer.
4. Close the display and all exterior doors of the computer.
5. Pack the computer with sufficient packing material to protect it. Use the original packing box or similar packaging.

IMPORTANT:	Ensure that there is no diskette in the diskette drive and that there are no PC Cards in the PC slots.

Troubleshooting

Diagnostic Error Codes

Diagnostic error codes occur if the system recognizes a problem while running the Compaq Diagnostic program. These error codes help identify possibly defective subassemblies.

The following tables list error codes, a description of the error condition, and the action required to resolve the error condition.

IMPORTANT:	Retest the system after completing each step. If the problem has been resolved, do not proceed with the remaining steps.

For the removal and replacement of a particular subassembly, see **Removal and Replacement Procedures**.

Select error codes by number or type:

101 through 114	Processor Test
200 through 215	Memory Test
300 through 304	Keyboard Test
401 through 403	Parallel Printer Test
501 through 516	Video Test
1101	Serial Test
1701 through 1736	Hard Drive Test
2402 through 2456	Video Test
2419 through 2456	Video Test
2458 through 2480	Video Test
3206	Audio Test
3301 through 6623	DVD or CD Test
8601 through 8602	TouchPad Pointing Device Test

Processor Test Error Codes		
Error Code	**Description**	**Recommended Action**
101-xx	CPU test failed	Replace the processor and retest.
102-xx	Coprocessor or Weitek Error	1. Run the Configuration and Diagnostics Utilities. 2. Replace the processor board and retest.
103-xx	DMA page registers test failed	Replace the system board and retest.
104-xx	Interrupt controller master test failed	
105-xx	Port 61 error	
106-xx	Keyboard controller self-test failed	
107-xx	CMOS RAM test failed	
108-xx	CMOS interrupt test failed	
109-xx	CMOS clock test failed	
110-xx	Programmable timer load data test failed	
113-xx	Protected mode test failed	
114-01	Speaker test failed	1. Check system configuration. 2. Verify cable connections to speaker. 3. Replace the system board and retest.

Top of Page

Memory Test Error Codes		
Error Code	**Description**	**Recommended Action**
200-xx	Memory machine ID test failed	1. Flash the system ROM and retest. 2. Replace the system board and retest.
202-xx	Memory system ROM checksum failed	

203-xx	Write/Read test failed	1. Remove the memory module and retest. 2. Install a new memory module and retest.
204-xx	Address test failed	
211-xx	Random pattern test failed	
214-xx	Noise test failed	
215-xx	Random address test failed	

Top of Page

Keyboard Test Error Codes		
Error Code	**Description**	**Recommended Action**
300-xx	Failed ID Test	1. Check the keyboard connection. If disconnected, turn off the computer and connect the keyboard. 2. Replace the keyboard and retest. 3. Replace the system board and retest.
301-xx	Failed Self-test/Interface Test	
302-xx	Failed Individual Key Test	
304-xx	Failed Keyboard Repeat Test	

Top of Page

Parallel Printer Test Error Codes		
Error Code	**Description**	**Recommended Action**
401-xx	Printer failed or not connected	1. Connect the printer. 2. Check power to the printer. 3. Install the loop-back connector and retest. 4. Check port and IRQ configuration. 5. Replace the system board and retest.
402-xx	Failed Port Test	
403-xx	Printer pattern test failed	

Top of Table

Diskette Drive Test		
Error Code	**Description**	**Recommended Action**
600-xx	Diskette ID drive types test failed	1. Replace the diskette media and retest. 2. Check and/or replace the diskette power and signal cables and retest. 3. Replace the diskette drive and retest. 4. Replace the system board and retest.
601-xx	Diskette format failed	
602-xx	Diskette read test failed	
603-xx	Diskette write, read, compare test failed	
604-xx	Diskette random read test failed	
605-xx	Diskette ID media failed	
606-xx	Diskette speed test failed	
609-xx	Diskette reset controller test failed	
610-xx	Diskette change line test failed	
697-xx	Diskette type error	
698-xx	Diskette drive speed not within limits	
699-xx	Diskette drive/media ID error	1. Replace media. 2. Run the Configuration and Diagnostics Utilities.

Top of Page

Serial Test Error Codes		
Error Code	**Description**	**Recommended Action**
1101-xx	Serial port test failed	1. Check port configuration 2. Replace the system board and retest.

Top of Page

Hard Drive Test Error Codes		
Error Code	**Description**	**Recommended Action**
1701-xx	Hard drive format test failed	1. Run the Configuration and Diagnostics Utilities and verify drive type. 2. Verify that all secondary drives have secondary drive capability. 3. Replace the hard drive and retest. 4. Replace the system board and retest.
1702-xx	Hard drive read test failed	
1703-xx	Hard drive write/read/compare test failed	
1704-xx	Hard drive random seek test failed	
1705-xx	Hard drive controller test failed	
1706-xx	Hard drive ready test failed	
1707-xx	Hard drive re-calibration test failed	
1708-xx	Hard drive format bad track test failed	
1709-xx	Hard drive reset controller test failed	
1710-xx	Hard drive park head test failed	
1715-xx	Hard drive head select test failed	
1716-xx	Hard drive conditional format test failed	
1717-xx	Hard drive ECC* test failed	
1719-xx	Hard drive power mode test failed	
1724-xx	Network preparation test failed	
1736-xx	Drive monitoring test failed	
* ECC = Error Correction Code		

Top of Page

Video Test Error Codes		
Error Code	**Description**	**Recommended Action**
501-xx	Video controller test failed	The following steps apply to error codes 501-xx through 516-xx: 1. Disconnect external monitor and test with internal LCD display. 2. Replace the display assembly and retest. 3. Replace the system board and retest.
502-xx	Video memory test failed	
503-xx	Video attribute test failed	
504-xx	Video character set test failed	
505-xx	Video 80 x 25 mode 9 x 14 character cell test failed	
506-xx	Video 80 x 25 mode 8 x 8 character cell test failed	
507-xx	Video 40 x 25 mode test failed	
508-xx	Video 320 x 200 mode color set 0 test failed	
509-xx	Video 320 x 200 mode color set 1 test failed	
510-xx	Video 640 x 200 mode test failed	
511-xx	Video screen memory page test failed	
512-xx	Video gray scale test failed	
514-xx	Video white screen test failed	
516-xx	Video noise pattern test failed	

Video Test Error Codes Continued		
Error Code	**Description**	**Recommended Action**
2402-xx	Video memory test failed	The following steps apply to error codes 2402-xx through 2456-xx: 1. Run the Configuration and Diagnostics Utilities. 2. Replace the display assembly and retest. 3. Replace the system board and retest.
2403-xx	Video attribute test failed	
2404-xx	Video character set test failed	
2405-xx	Video 80 x 25 mode 9 x 14 character cell test failed	
2406-xx	Video 80 x 25 mode 8 x 8 character cell test failed	
2408-xx	Video 320 x 200 mode color set 0 test failed	

2409-xx	Video 320 x 200 mode color set 1 test failed	
2410-xx	Video 640 x 200 mode test failed	
2411-xx	Video screen memory page test failed	
2412-xx	Video gray scale test failed	
2414-xx	Video white screen test failed	
2416-xx	Video noise pattern test failed	
2418-xx	ECG/VGC memory test failed	

Video Test Error Codes Continued

Error Code	Description	Recommended Action
2419-xx	ECG/VGC ROM checksum test failed	1. Run the Configuration and Diagnostics Utilities. 2. Disconnect external monitor and test with internal LCD display. 3. Replace the display assembly and retest. 4. Replace the system board and retest.
2421-xx	ECG/VGC 640 x 200 graphics mode test failed	
2422-xx	ECG/VGC 640 x 350 16 color set test failed	
2423-xx	ECG/VGC 640 x 350 64 color set test failed	
2424-xx	ECG/VGC monochrome text mode test failed	
2425-xx	ECG/VGC monochrome graphics mode test failed	
2431-xx	640 x 480 graphics test failure	
2432-xx	320 x 200 graphics (256 color mode) test failure	
2448-xx	Advanced VGA Controller test failed	
2451-xx	132-column Advanced VGA test failed	
2456-xx	Advanced VGA 256 Color test failed	

Video Test Error Codes Continued

Error Code	Description	Recommended Action
2458-xx	Advanced VGA BitBLT test	The following applies to error codes 2458-xx through 2480-xx: Replace the system board and retest.
2468-xx	Advanced VGA DAC test	
2477-xx	Advanced VGA data path test	
2478-xx	Advanced VGA BitBLT test	
2480-xx	Advanced VGA LineDraw test	

Top of Page

Audio Test Error Codes		
Error Code	**Description**	**Recommended Action**
3206-xx	Audio System Internal Error	Replace the system board and retest.

Top of Page

TouchPad/Pointing Device Interface Test Error Codes		
Error Code	**Description**	**Recommended Action**
8601-xx	Mouse test failed	1. 1. Replace the TouchPad and retest. 2. Replace the system board and retest.
8602-xx	Interface test failed	

Top of Page

DVD or CD Drive Test Error Codes		
Error Code	**Description**	**Recommended Action**
3301-xx	DVD or CD drive read test failed	1. 1. Replace the DVD or CD and retest. 2. Verify that the speakers are connected. 3. Verify that drivers are loaded and properly installed. 4. Replace the DVD or CD drive and retest. 5. Replace the system board and retest.
3305-xx	DVD or CD drive seek test failed	
6600-xx	ID test failed	
6605-xx	Read test failed	
6608-xx	Controller test failed	
6623-xx	Random read test failed	

Top of Page

Troubleshooting

Troubleshooting without Diagnostics

This section provides information about how to identify and correct some common hardware, memory, and software problems. It also explains several types of common messages that may be displayed on the screen. The following pages contain troubleshooting information on:

Audio
Battery
DVD or CD drive
Display
Hard drive
Hardware Installation
Memory
PC Card
Power
Printer
TouchPad
Keyboard/Numeric keypad

Since symptoms can appear to be similar, carefully match the symptoms of the computer malfunction against the problem description in the Troubleshooting tables to avoid a misdiagnosis.

WARNING: To avoid a potential shock hazard during troubleshooting procedures, disconnect all power sources before removing the keyboard cover or the display bezel.

Before Replacing Parts

Verify that cables are connected properly to the suspected defective parts.

- Run Computer Setup after connecting external devices.
- Verify that all required device drivers are installed.
- Verify that all required changes have been made to the CONFIG.SYS file.
- Verify that all required changes have been made to the AUTOEXEC.BAT file.
- Verify that all printer drivers have been installed for each application.

Troubleshooting

Solving Minor Problems

Some minor problems and possible solutions are outlined in the following tables. If the problem appears related to a software application, check the documentation provided with the software.

Solving Audio Problems

Some common audio problems and solutions are listed in the following table.

Solving Audio Problems

Problem	Probable Cause	Solution(s)
Computer does not beep after the Power-On Self-Test (POST).	This is typical; it indicates successful completion of the Power-On Self-Test (POST).	No action is required.

Solving Battery Pack and Battery Gauge Problems

Some common causes and solutions for battery pack problems are listed in the following table. The "Solving Power Problems" section in this chapter may also be applicable.

Solving Battery Pack and Battery Gauge Problems		
Problem	**Probable Cause**	**Solution(s)**
Computer won't turn on when battery pack is inserted and power cord is unplugged.	Battery pack is discharged.	Connect the computer to an external power source and charge the battery pack. Replace the battery pack with a fully charged battery pack.
		Check the battery connectors on the system board to verify they are evenly spaced and that they are not bent or broken.
Computer is beeping and battery icon is blinking.	Battery charge is low.	Immediately save any open file(s). Then complete either one of the following: • Connect the computer to an external power source to charge the battery pack. • Turn off the computer or initiate Hibernation until you can find another power source or charge the battery pack.

Computer battery icon (front on the unit) blinks to indicate low battery condition, but computer does not beep.	Volume is turned down too low.	Adjust the volume.
Battery icon doesn't light and battery pack won't fast charge.	Battery pack is already charged.	No action is necessary.
Battery pack was exposed to temperature extremes.		Allow time for the battery pack to return to room temperature.
Battery pack is at end of its life.		Replace battery pack.
You have to set the date and time every time you turn on the computer.	RTC battery is dead.	Replace the RTC battery. See Removing the RTC Battery section in this guide.

Top of Page

Battery Pack/Gauge Problems Continued

Problem	Probable Cause	Solution(s)
Battery charge does not last as long as expected.	Battery is being exposed to high temperatures or extremely cold temperatures.	Keep the battery pack within the recommended temperature range for operation or storage. • Operating Range: 50° F to 104° F (10° C to 40° C) • Storage Range: -4° F to 86° F (-20° C to 30° C) Recharge the battery pack.
	Battery has partially self-discharged.	Recharge the battery. Discharge the battery completely and then recharge it.
	Power management is disabled.	Set a power management level in Computer Setup.
	An external device or PC Card is draining the battery.	Turn off or disconnect external devices when not using them.

Battery pack is warm to the touch after charging.	Normal warming has occurred due to charging.	No action is required.
Battery pack operating time is far less than the documented average operating time.	Power management is turned off or disabled.	Enable power management in Computer Setup and in Windows Power Properties.
An external device or PC Card is draining the battery.		Turn off or disconnect external devices when not using them.
Battery pack has partially self-discharged.		Condition the battery pack by fully charging, fully discharging, then fully recharging it. To maintain the charge, leave battery packs in the computer when it is connected to external power. If the computer is disconnected from external power for more than two weeks, remove battery packs from the computer to reduce the discharge rate.

Battery pack is being exposed to high temperatures or extremely cold temperatures.		Keep the battery pack within the recommended temperature range for operation or storage. • Operating Range: 50° F to 104° F (10° C to 40° C) • Storage Range: -4° F to 86° F (-20° C to 30° C) Recharge the battery pack.

Top of Page

Solving DVD or CD Drive Problems

Some common causes and solutions for DVD or CD drive problems are listed in the following table.

Solving DVD or CD Drive Problems		
Problem	**Probable Cause**	**Solution(s)**

DVD or CD drive cannot read a compact disc.	Disc is upside down or is improperly inserted in the DVD or CD drive.	Open the loading tray, lay the compact disc in it (label side up), then close the tray.
	CD is CD Plus or Pregap/Track 0 type.	Cannot read these type CDs in 24x. Remove the CD.

Top of Page

Solving Diskette Drive Problems

Some common causes and solutions for diskette drive problems are listed in the following table.

Solving Diskette Drive Problems		
Problem	**Probable Cause**	**Solution(s)**
Diskette drive cannot write to a diskette.	Diskette is write-protected.	Disable the diskette's write-protect feature or use a diskette that is not write-protected.
	Computer is writing to the wrong drive.	Check the drive letter in the path statement.
	Not enough space is left on the diskette.	Use another diskette.

	Drive error has occurred.	Run Computer Checkup from the Compaq Diagnostics diskette.
	Diskette is not formatted.	Format the diskette. At the system prompt, enter: FORMAT A:
Diskette drive cannot read a diskette.	The wrong type of diskette is being used.	Use the type of diskette required by the drive.
	Diskette has a bad sector.	Copy files to hard drive or another diskette. Reformat bad floppy.
	Drive error has occurred.	Run Computer Checkup from the Compaq Diagnostics diskette.
	Diskette is not formatted.	Format the diskette. At the system prompt, enter: FORMAT A:
Cannot boot from diskette.	Bootable diskette is not in drive A.	Put the bootable diskette in drive A.
	Diskette Boot has incorrect setting in Computer Setup.	Run Computer Setup and set diskette as first to boot.

Top of Page

Solving Display Problems

This section lists some common causes and solutions for computer display and external monitor problems.

You can perform a monitor self-test on an external VGA color or monochrome monitor by disconnecting the monitor from the computer. To do so, complete the following steps:

1. Turn off the monitor.
2. Turn off the computer.
3. Disconnect the monitor signal cable from the computer.
4. Turn on the monitor and allow it to warm up for one minute.

The display should be white. A narrow black border may also appear on the left and right sides of the display. Either of these displays indicates that the monitor is working properly.

Solving Display Problems		
Problem	**Probable Cause**	**Solution(s)**
Screen is dim.	Control for brightness	Adjust the Brightness of the display by using **Fn+F7** (¯) or **Fn+F8** (-).
	Computer screen is in direct light.	Tilt display or move computer.

Screen is blank.	Screen save was initiated by Power Management due to lack of user activity.	Press any key or touch the TouchPad.
	Display has overheated.	If computer is in direct sunlight, move it and allow it to cool off.
Display is blank and the Half-Moon icon appears on the Disqplay2 status.	System is in Suspend mode.	Press any key or touch the TouchPad.
Internal display is blank and the screen on an external monitor displays information.	Display function was switched to the external monitor.	Use **Fn+F3** to switch between LCD or CRT.

Top of Page

Solving Display Problems Continued		
Problem	**Probable Cause**	**Solution(s)**
Internal display flashes or has garbled characters when computer is connected to external monitor.	Using 1024 × 768 or higher resolution on external monitor and have toggled back to internal display, which	Restart the computer.

	supports up to 800 × 600.	
The light tubes on the edge of the display panel do not light up at all and Power-On Self-Test (POST) completes when the unit is powered up.**	Improper backlight or display cable connections	Replace the display assembly.
	Defective inverter board.	Replace the display assembly.
	Defective display cable.	Replace the display assembly.
	Defective display panel.	Replace the display assembly.
	Defective system board.	Replace the system board.
The light tubes on the edge of the display panel do not light up at all and Power-On Self-Test (POST) does not complete when the unit is powered up.**	Defective system board.	Replace the system board.
Backlight (brightness) cannot be adjusted with Fn+F7 (¯) or Fn+F8 (-).***	Improper display cable connections.	1. Reseat the display cable to the system board. 2. Replace the display assembly.
	Defective inverter board.	Replace the display assembly.

	Defective display cable.	Replace the display assembly.
	Defective system board.	Replace the system board.

** This problem indicates that the backlight or its power circuitry has failed. Since you cannot observe the POST result on the display panel when the backlight is not functioning, connect the unit to an external monitor before powering the unit up. If an external monitor is not available, verify that POST completes by opening and closing the display, listening for the single or double beep, and watching for the icons to turn on at the front of the computer.

Top of Page

Solving Display Problems Continued

Problem	Probable Cause	Solution(s)
This display panel has a continuous pattern across it (e.g., a "jailbars" pattern), has a single color on it, or has garbled graphics across the entire panel. This failure is for patterns across the entire panel (not just on one section).	Improper display cable connections	Reseat the display cable to the following until the problem is solved: 1. System board 2. Display assembly
	Defective display cable.	Replace the display assembly.
	Defective inverter board.	Replace the display assembly.

	Defective system board.	Replace the system board.
A single line, small group of lines, or block appears on the display panel. This failure occurs in only a section of the display panel.	Defective display panel.	Replace the display assembly.

Top of Page

NOTE: To perform a "self-test" on an external VGA color or monochrome monitor, complete the following steps: The screen should be white. A narrow black border may also appear on the left and right sides of the display. Either of these displays indicates that the monitor is working properly.

Solving Hard Drive Problems

Some common causes and solutions for hard drive problems are listed in the following table.

CAUTION: To prevent loss of information, always maintain an up-to-date backup of your hard drive at all times, in case of errors or failures.

Solving Hard Drive Problems		
Problem	**Probable Cause**	**Solution(s)**
Reading hard drive takes an unusually long time after restarting the computer.	System entered Hibernation due to low battery condition and is now exiting from it.	Give the system time to restore the previously saved data to its exact state before Hibernation.
Hard drive error occurs.	Hard drive has bad sectors or has failed.	Run Computer Checkup.
Hard drive does not work.	Hard drive is not seated properly.	Turn off and unplug the computer, remove the battery pack, and remove and then reinstall the hard drive.

Top of Page

Solving Hardware Installation Problems

Some common causes and solutions for hardware installation problems are listed in the following table.

Solving Hardware Installation Problems		
Problem	**Probable Cause**	**Solutions(s)**
A new device is not recognized as part of the computer system.	Cable(s) of new external device are loose or power cables are unplugged.	Ensure that all cables are properly and securely connected.
	Power switch of new external device is not turned on.	Turn off the computer, turn on the external device, then turn on the computer to integrate the device with the computer system.
	Device is not seated properly.	Turn off the computer and reinsert the device.

Top of Page

Solving Keyboard/Numeric Keypad Problems

Some common causes and solutions for keyboard/numeric keypad problems are listed in the following table.

Solving Keyboard/Numeric Keypad Problems		
Problem	**Probable Cause**	**Solution(s)**
Embedded numeric keypad on computer keyboard is disabled.	Num Lock function is not enabled.	Press the **Fn**+**NumLk** keys to enable the Num Lock function and embedded numeric keypad. The Num Lock icon on the status panel turns on.
Embedded numeric keypad is disabled and Num Lock function is on.	External numeric keypad is connected to the computer.	Disconnect the external numeric keypad from the computer.

Top of Page

Solving Memory Problems

Some common causes and solutions for memory problems are listed in the following table.

Solving Memory Problems		
Problem	**Probable Cause**	**Solution(s)**

Memory count during Power-On Self-Test (POST) is incorrect.	Optional memory expansion card is installed incorrectly, is incompatible with the computer, or is defective.	Ensure that the optional memory expansion card is installed correctly.
"Out of Memory" message is displayed on the screen or insufficient memory error occurs during operation.	System ran out of memory for the application.	Check the application documentation for memory requirements. Install additional memory.
	Too many TSR (terminate-and stay-resident) applications are running.	Remove from memory any TSR applications that you do not need.

Top of Page

Solving Minor Problems continued

maintenance & service guide

Presario 1600 Series

Models: 1600T, 1600-XL140, 1600-XL141, 1600-XL142, 1600-XL143, 1600-XL144, 1600-XL145, 1600-XL146, and 1600-XL147

Preliminary Steps
Clearing the Power-On Password
Power-On Self Test (POST)
Compaq Diagnostics
Diagnostic Error Codes
Troubleshooting Without Diagnostics
Solving Minor Problems
Contacting Compaq Support

Troubleshooting

Solving PC Card Problems

The following table lists some common causes and solutions for PC Card problems.

Solving PC Card Problems

Problem	Probable Cause	Solution(s)
When turned on, the computer does not beep when a PC Card is inserted.	Card is not inserted properly.	Ensure that the card is inserted in the correct orientation.
	PC Card beeps are disabled.	Double-click the PC Card icon in the Control Panel, click the **Global Settings** tab, the enable PC Card sound effects.
	Speaker is turned off or volume is turned down.	Press **volume buttons** to turn the speaker on, then increase the volume.

	PC Card drivers are not installed.	Double click the **Add New Hardware** icon in the Control Panel for installation instructions. If PC Card or drivers are not compatible with Windows, install drivers and use the PC Card in MS-DOS mode.
	Card or card driver is not supported.	Contact your Compaq authorized service provider for a list of PC Cards tested successfully in Compaq PC Card platforms.
PC Card modem, fax, or network card does not work.	Card is not fully inserted into the slot or is not inserted properly.	Ensure that the card is inserted in the correct orientation.
	Telephone cord is not plugged in all the way.	Check and secure telephone connection.
	Necessary drivers are not installed (turned on).	Install drivers.
PC Card modem or fax card does not work.	You are trying to access the card using the wrong COM port.	See Specifications to verify COM port.
	The card conflicts with a serial device.	See Specifications to verify address.
	The card is not supported.	Use supported cards only.

Top of Page

Solving Power Problems

Also see "Solving Battery and Battery Gauge Problems" in this section.

Solving Power Problems		
Problem	**Probable Cause**	**Solution(s)**
Computer won't turn on and battery pack is not inserted.	Computer is not connected to a power source. Power cords to the external power source are unplugged.	Insert battery or connect an external power source. Ensure that power cords connecting the computer and the external power source are plugged in properly.
	Power adapter is defective.	Replace AC Adapter and restart.
Computer turned off while it was left unattended and the power icon is off.	System board is defective.	Replace the system board.
	System initiated Hibernation due to a critical low-battery condition.	Replace the battery pack with a fully charged battery pack or connect the computer to an external power source. Then turn on the computer.

	System initiated Hibernation after a preset timeout.	Turn on the computer.

Top of Page

Solving Printer Problems

If you experience problems printing, run a printer self-test. Refer to the documentation provided with your printer for instructions.
If the self-test fails, it is a printer-specific problem. Also refer to the printing section of your application documentation.

Solving Printer Problems		
Problem	**Probable Cause**	**Solution(s)**
Printer will not turn on.	The signal cable may not be connected properly, or the printer is unplugged.	Ensure that the signal cable is properly connected and that the power cord is connected to the electrical outlet.
Printer will not print.	Printer is not turned on or is offline.	Turn the printer on and set it to online.
	The device drivers for your application are not installed.	Refer to the printer documentation to install the correct printer driver.

	Printer that is set up for a network is not connected to the network.	Connect the printer to the network.
	Printer cable is too long, unshielded, or defective.	Replace the cable.
	Paper tray is empty.	Fill the paper tray with paper and set the printer to online.
Printer prints garbled information.	Correct printer drivers are not installed.	Refer to the printer documentation to install the correct printer driver.
	Cable is not connected properly.	Ensure that the printer signal cable is properly connected to the computer.

Top of Page

Solving TouchPad/Pointing Device Problems

The following table lists some common causes and solutions for TouchPad/pointing device problems.

Solving Touch Pad/Pointing Device Problems	

Problem	Cause	Solution(s)
TouchPad or mouse does not work.	Incorrect or no device driver is installed.	Install the device driver and add to the AUTOEXEC.BAT file or CONFIG.SYS file.
	The device driver is not installed in Windows.	Install the TouchPad/mouse driver in Windows.
External mouse does not work.	Mouse is not securely connected or is connected to an incorrect external connector.	Ensure that the mouse is securely connected to the appropriate external connector.
TouchPad or mouse does not work even though the device is enabled in Windows.	Mouse is not enabled.	Enter MOUSE at the system prompt to activate the mouse device driver.
		Add a line in the AUTOEXEC.BAT file to automatically activate the mouse device driver each time computer is turned on or restarted.
	Cable not properly seated in TouchPad board.	Reseat cable.
	Defective TouchPad board.	Replace TouchPad board.
	Defective system board.	Replace system board.

	Device driver is not correctly installed in Windows.	Install the appropriate device driver in Windows.
Cursor skips or moves abnormally when using the TouchPad.	The TouchPad needs to be cleaned.	Clean the TouchPad with a cloth dampened with alcohol or an ammonia-based glass cleaner. Wipe up liquid with a dry cloth.

Top of Page

Return to Solving Minor Problems

1.800.AT.COMPAQ

privacy and legal statement